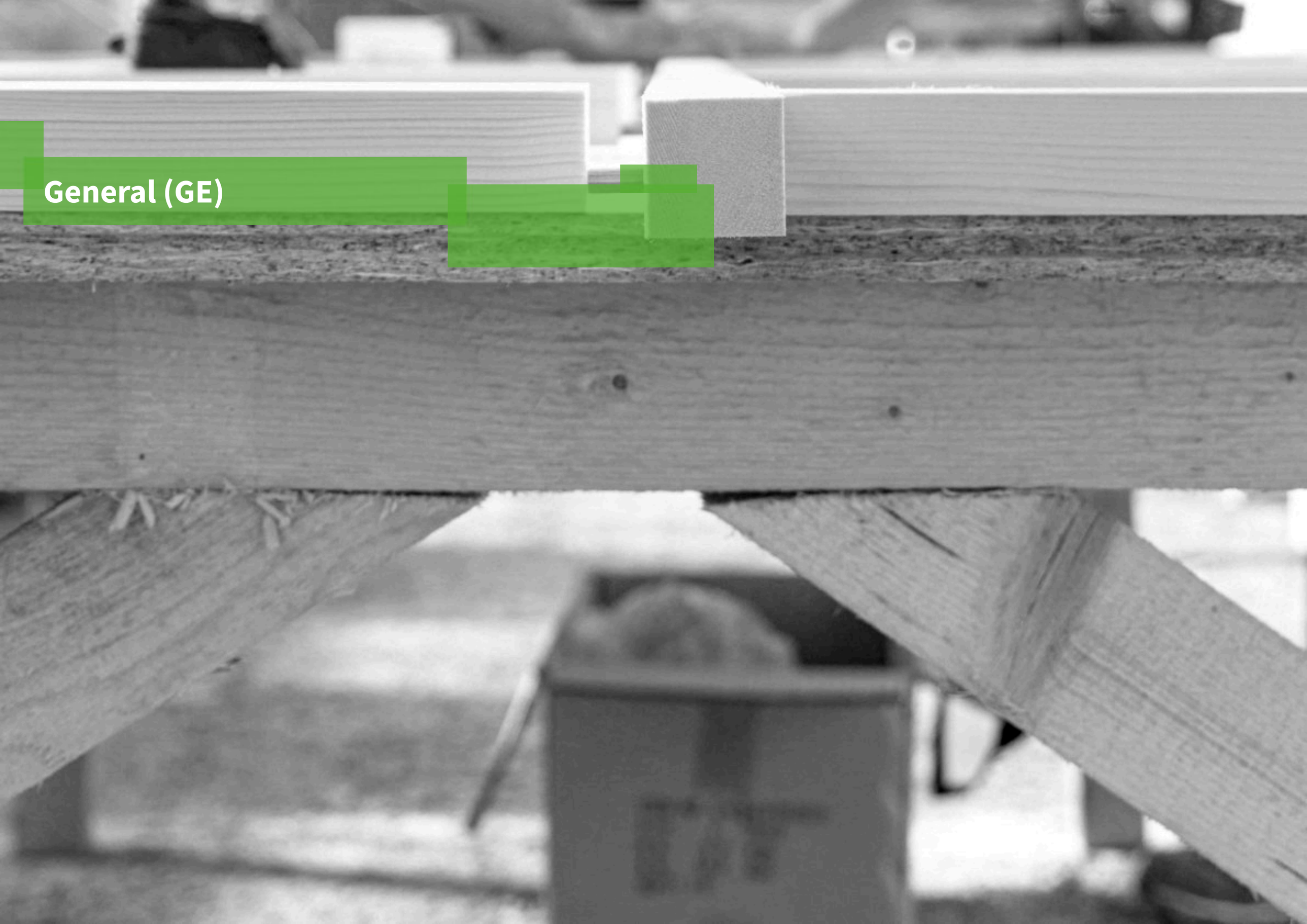

General (GE)

GE-10 Sheet List

General (GE)

- GE-00 Cover sheet
- GE-10 Sheet List
- GE-11 Summary of changes
- GE-20 General Symbols
- GE-21 General Abbreviations

Architecture (AR)

- AR-0001 Conceptual Drawings
- AR-1001 Solar Campus Plan
- AR-2001 Site Plan Solar Campus
- AR-2101 Floor Plan
- AR-2102 Upper Floor Plan
- AR-2201 Roof Plan
- AR-2301 Building Elevation South
- AR-2302 Building Elevation West
- AR-2401 Building Section B-B
- AR-2402 Building Section A-A
- AR-2403 Building Section 1-1
- AR-2404 Building Section 2-2
- AR-2405 Building Section 3-3
- AR-5006 exterior Rendering
- AR-5006 exterior Rendering
- AR-5006 exterior Rendering
- AR-5006 exterior Rendering
- AR-5006 exterior Rendering

Interiors (IN)

- IN-2001 Kitchen plan view
- IN-2101 Kitchen plan section
- IN-2201 Cooking Island
- IN-2202 Container bedroom wardrobe and coat rack
- IN-2203 Container Kitchen
- IN-4001 Furnishing Upholstered element with backrest
- IN-4002 Furnishing Couch element table
- IN-4003 Furnishing Element without backrest
- IN-4004 Furnishing Dining table
- IN-4005 Furnishing Hall cupboard
- IN-4006 Furnishing Bedroom wardrobe
- IN-4007 Furnishing Wardrobe entrance
- IN-4008 Outlet ceiling box schema
- IN-5001 Interior Rendering
- IN-5002 Interior Rendering
- IN-5003 Interior Rendering
- IN-5004 Interior Rendering
- IN-5005 Interior Rendering
- IN-5006 Interior Rendering
- IN-5007 Interior Rendering

Structural (ST)

- ST-1001 Foundation Plan
- ST-1002 Foundation plan Ramp, Platform
- ST-1101 Structural floor plan Floor elements
- ST-1102 Structural floor plan floor elements bottom ribs
- ST-1103 Structural floor plan floor Elements ceiling ribs
- ST-1104 Structural floor plan framework ceiling
- ST-1105 Structural floor plan Wood module wall
- ST-1106 Structural floor plan Wall elements Insulation panels
- ST-1107 structural floor plan Steel staircase and walkway
- ST-1201 Structural roof plan
- ST-1202 Structural roof plan Roof elements
- ST-1301 Structural Sections supporting wooden wall
- ST-1302 Structural section truss 01
- ST-1303 Structural section truss 02
- ST-1304 Structural Section Wall elements upper floor
- ST-1305 Structural sections Wall elements 1.1 and 1.2 Upper floor
- ST-1306 Structural section Technology module •

GE-10 Sheet List

Plumbing (PL)

- PL-0001 Conceptual Drawings
- PL-1001 Sanitäry Overview - Level 01
- PL-1002 Sanitäry Overview - Level 02
- PL-1003 Plumping Plan - Level 01
- PL-1004 Plumping Plan - Level 02
- PL-2001 Greywater - Level 01
- PL-2002 Greywater - Level 02
- PL-3001 Drain_Waste_Vent - Level 01
- PL-3002 Drain_Waste_Vent - Level 02
- PL-4001 DW Schematic diagram
- PL-4002 BW-Schematic diagram
- PL-4003 GW-Schematic diagram
- PL-5001 Supply and removal - Isometric
- PL-5101 Greywater - Isometric
- PL-5201 Greywater - Isometric

Solar Water Heating (SW)

SW-0001 Conceptual Drawings
SW-1001 Plan Level 01 + 02
SW-2001 Solar Water Heating - Isometric

Mechanical (ME)

- ME-0001 Conceptual Drawings
- ME-1001 HVAC distribution Plan - Level 01
- ME-1002 HVAC distribution Plan - Level 02
- ME-1003 HVAC distribution Plan - Level 01
- ME-1101 HVAC equipment - Level 01
- ME-2001 Heating - Level 01
- ME-2002 Cooling - Level 01
- ME-3001 Mechanical room elevation
- ME-4000 Heating Cooling distribution Schematic drawings
- ME-4002 Ventilation distribution Schematic drawings
- ME-4101 Heating mode Schematic drawings
- ME-5001 Controls
- ME-5002 Controls
- ME-6001 Ventilation - Isometric
- ME-6002 Heating - Isometric

Electrical (EL)

- EL-0001 Conceptual Drawings
- EL-1001 Grid Interconnection
- EL-2001 DC wiring diagram
- EL-3001 Power Plan Level01
- EL-3002 Power Plan Level02
- EL-3003 Power Plan Level03
- EL-4001 Lighting Plan Inside - Level01
- EL-4002 Lighting Plan Outside - Level01
- EL-4003 Lighting Plan Outside - Level02
- EL-5001 One-line Diagram
- EL-6001 AC Circuit layout
- EL-6002 AC Circuit layout
- EL-6003 AC Circuit layout
- EL-6004 AC Circuit layout
- EL-6005 AC Circuit layout
- EL-6006 AC Circuit layout
- EL-6007 AC Circuit layout
- EL-6008 AC Circuit layout
- EL-6009 AC Circuit layout
- EL-6010 AC Circuit layout
- EL-6011 AC Circuit layout
- EL-6012 AC Circuit layout
- EL-6013 AC Circuit layout
- EL-6014 AC Circuit layout
- EL-6015 AC Circuit layout
- EL-6016 AC Circuit layout
- EL-6017 AC Circuit layout
- EL-6018 AC Circuit layout
- EL-6019 AC Circuit layout
- EL-6020 AC Circuit layout

GE-10 Sheet List

Photovoltaic System (PV)

- PV-0001 Conceptual Drawings
- PV-1001 Photovoltaic system general
- PV-2001 Photovoltaic system DC circuits
- PV-3001 Photovoltaic system AC circuits
- PV-4001 Photovoltaic system grounding system

Telecommunication and Building Management System (BMS)

- BMS-0001 Conceptual Drawings
- BMS-1001 Wiring Plan
- BMS-1002 Wiring Plan
- BMS-1003 Wiring Plan
- BMS-1004 Wiring Plan
- BMS-1005 Wiring Plan
- BMS-1006 Wiring Plan
- BMS-1007 Wiring Plan
- BMS-1008 Wiring Plan
- BMS-1009 Wiring Plan
- BMS-1010 Wiring Plan
- BMS-1011 Wiring Plan
- BMS-1012 Wiring Plan
- BMS-1013 Wiring Plan
- BMS-1014 Wiring Plan
- BMS-1015 Wiring Plan
- BMS-1016 Wiring Plan
- BMS-1017 Wiring Plan
- BMS-1018 Wiring Plan
- BMS-1019 Wiring Plan
- BMS-1020 Wiring Plan
- BMS-1021 Wiring Plan
- BMS-1022 Wiring Plan
- BMS-1023 Wiring Plan
- BMS-2001 Schematic diagram
- BMS-3001 Equipment
- BMS-3002 Equipment
- BMS-3003 Equipment

Instrumentation Drawings (ID)

- ID-0001 Conceptual Drawings
- ID-1001 General Monitoring Level01
- ID-1002 General Monitoring Level02
- ID-1003 General Monitoring Level03
- ID-2001 Monitoring panel room Level01
- ID-2002 Monitoring panel room Detail
- ID-3001 Electricity meters' topology
- ID-4001 Electricity meters' connection
- ID-5001 House appliances Level01

Site Operation (SO)

GE-10 Sheet List

FIre Protection (FP)

- FP-0001 Fire Protection Plan first floor
- FP-0002 Fire Protection Plan upper floor

Health and Safety (HS)

- HS-0001 Way from SDE Campus to Hospital
- HS-0002 Site Plan Solar Campus with Truckroute
- HS-1001 Sign Instruction
- HS-1002 Working phases
- HS-1003 Crane radius
- HS-1004 Crane radius
- HS-1005 Foundation
- HS-1006 Module #1
- HS-1007 Module #2
- HS-1008 Module #3
- HS-1009 Stairs & technical room module
- HS-1010 Greenhouse & Roof
- HS-1011 Arcade & Façade
- HS-2001 Escaperoute groundfloor
- HS-2002 Escaperoute firstfloor

Public Tour (PT)

- PT-0001 site accessibility
- PT-0002 house tour floor plan

GE-11 Summary of Changes

GE-20 General Symbols

North Arrow

GE-21 General Abbreviations

Architecture (AR)

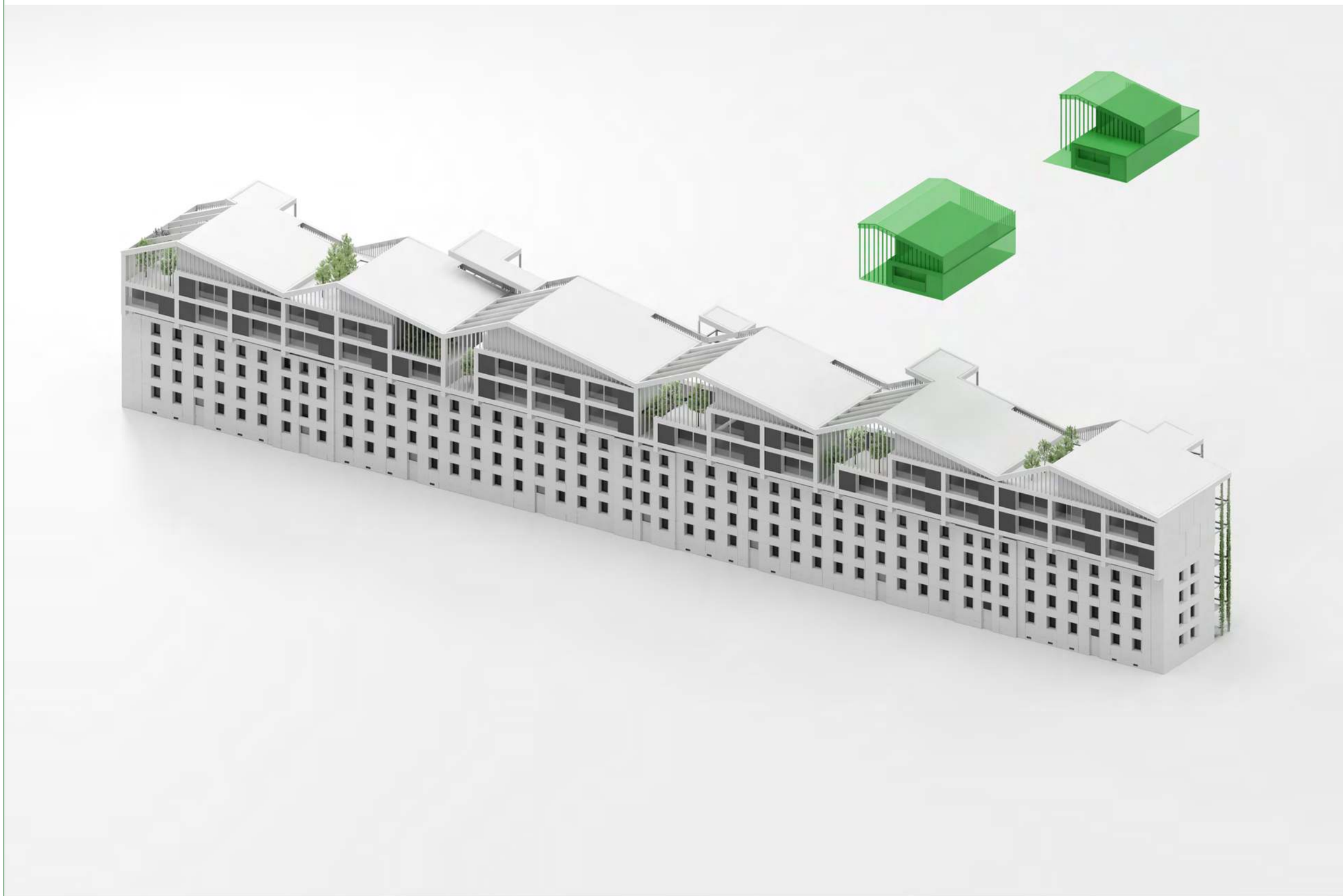

levelup

solar decathlon europe 21-22
WUPPERTAL GERMANY

Scale

Phase
D#6

Drawing Content
Conceptual drawing

AR-0001

levelup

solar decathlon europe 21

WUPPERTAL GERMANY ...goes urban!

General	GE
Architecture	**AR**
Interiors	IN
Structural	ST
Plumbing	PL
Solar Water Heating	SW
Mechanical	ME
Electrical	EL
Photovoltaic System	PV
Teleco. & Build. Aut. System	BAS
Instrumentation Drawings	ID
Site Operations	SO
Fire Protection	FP
Healthy & Safety	HS
Public Tour	PT

0 12,5 25 37,5 50

Scale
1:1000

Phase
D#6

Drawing Content - HDU
SDE21/22 Solar Campus Plan

AR-1001

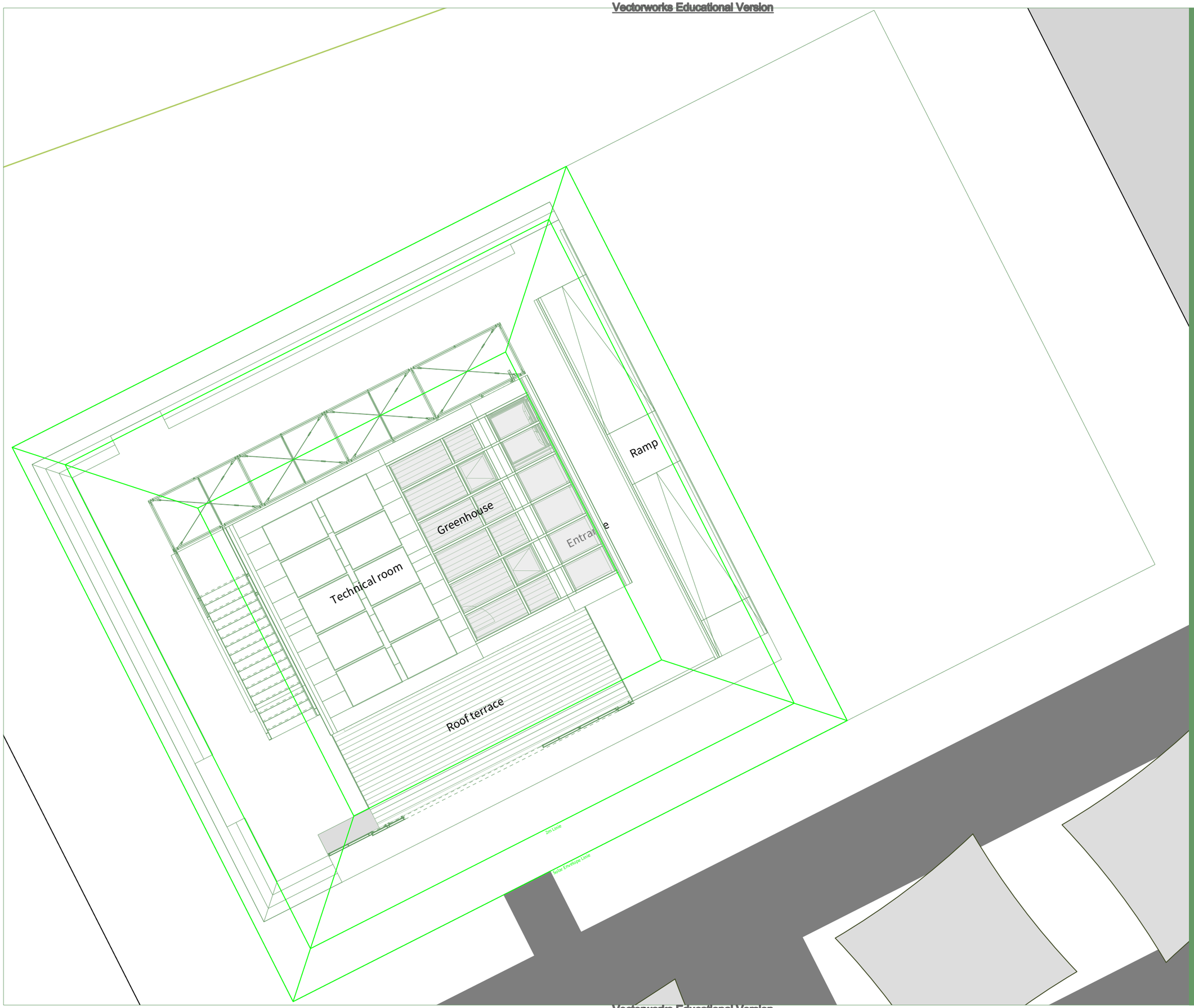

levelup

solar decathlon europe 21
WUPPERTAL GERMANY ...goes urban!

General	GE
Architecture	**AR**
Interiors	IN
Structural	ST
Plumbing	PL
Solar Water Heating	SW
Mechanical	ME
Electrical	EL
Photovoltaic System	PV
Teleco. & Build. Aut. System	BAS
Instrumentation Drawings	ID
Site Operations	SO
Fire Protection	FP
Healthy & Safety	HS
Public Tour	PT

0 1,3 2,5 3,8 5

Scale
1:100

Phase
D#6

Drawing Content - HDU
Site Plan
Solar Campus

AR-2001

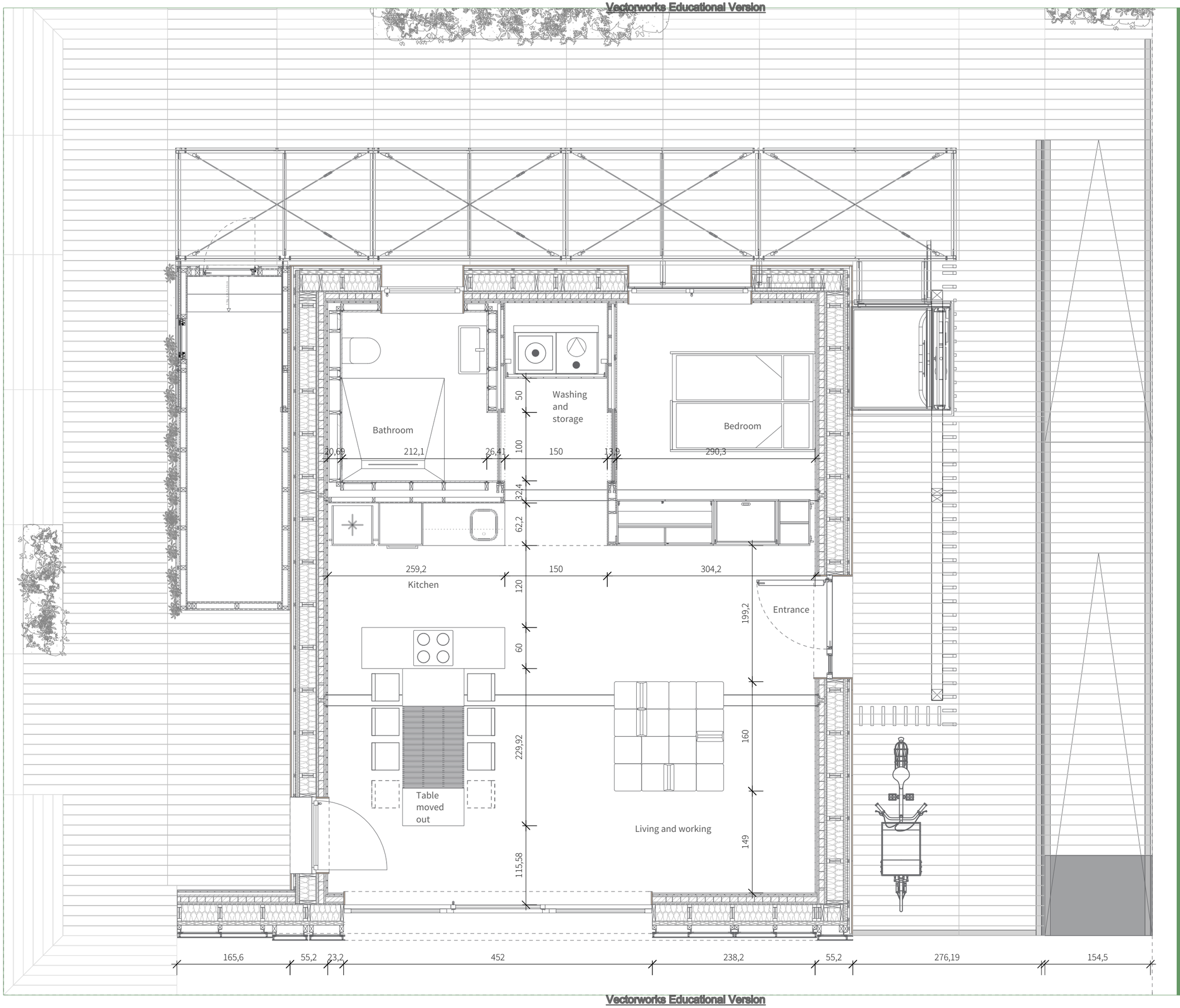

levelup

solar decathlon europe 21

WUPPERTAL GERMANY ...goes urban!

General	GE
Architecture	**AR**
Interiors	IN
Structural	ST
Plumbing	PL
Solar Water Heating	SW
Mechanical	ME
Electrical	EL
Photovoltaic System	PV
Teleco. & Build. Aut. System	BAS
Instrumentation Drawings	ID
Site Operations	SO
Fire Protection	FP
Healthy & Safety	HS
Public Tour	PT

0 0,6 1,3 1,9 2,5

Scale
1:50

Phase
D#6

Drawing Content - HDU
Floor Plan

AR-2101

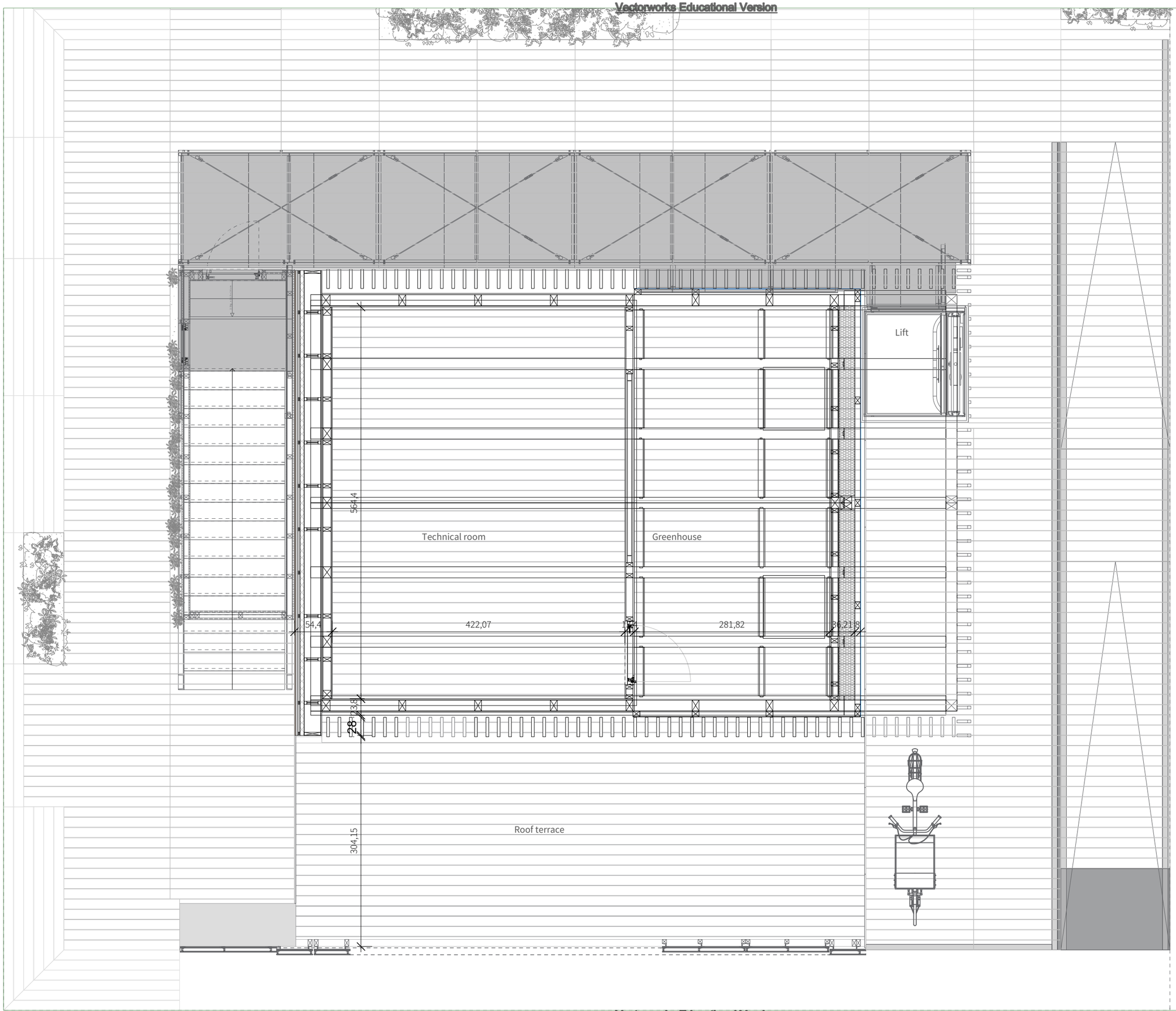

levelup

solar decathlon europe 21
WUPPERTAL GERMANY ...goes urban!

General	GE
Architecture	**AR**
Interiors	IN
Structural	ST
Plumbing	PL
Solar Water Heating	SW
Mechanical	ME
Electrical	EL
Photovoltaic System	PV
Teleco. & Build. Aut. System	BAS
Instrumentation Drawings	ID
Site Operations	SO
Fire Protection	FP
Healthy & Safety	HS
Public Tour	PT

0 0,6 1,3 1,9 2,5

Scale
1:50

Phase
D#6

Drawing Content - HDU
Upper floor plan

AR-2102

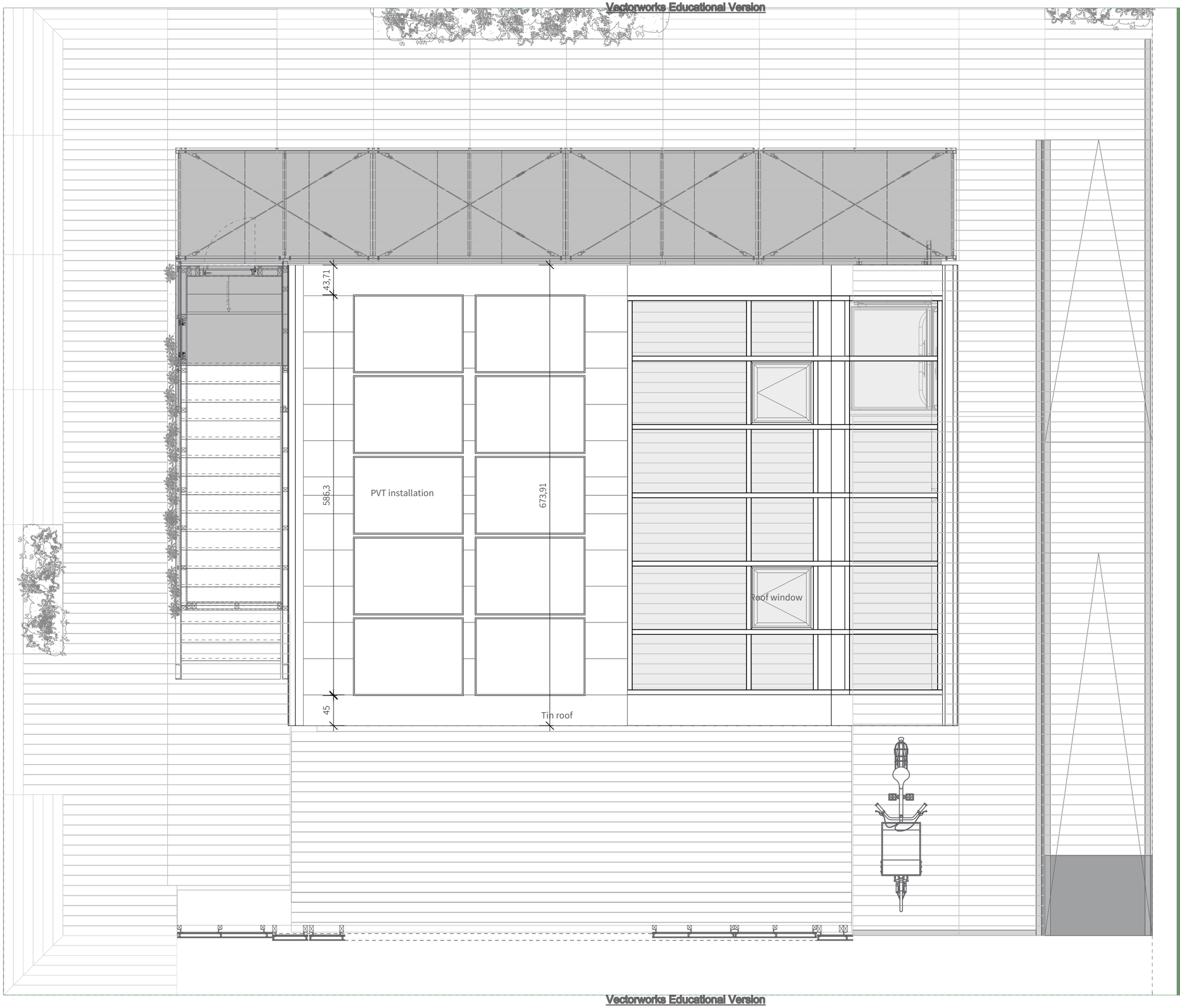

levelup

solar decathlon europe 21

WUPPERTAL GERMANY ...goes urban!

General	GE
Architecture	**AR**
Interiors	IN
Structural	ST
Plumbing	PL
Solar Water Heating	SW
Mechanical	ME
Electrical	EL
Photovoltaic System	PV
Teleco. & Build. Aut. System	BAS
Instrumentation Drawings	ID
Site Operations	SO
Fire Protection	FP
Healthy & Safety	HS
Public Tour	PT

0 0,6 1,3 1,9 2,5

Scale
1:50

Phase
D#6

Drawing Content - HDU
Roof Plan

AR-2201

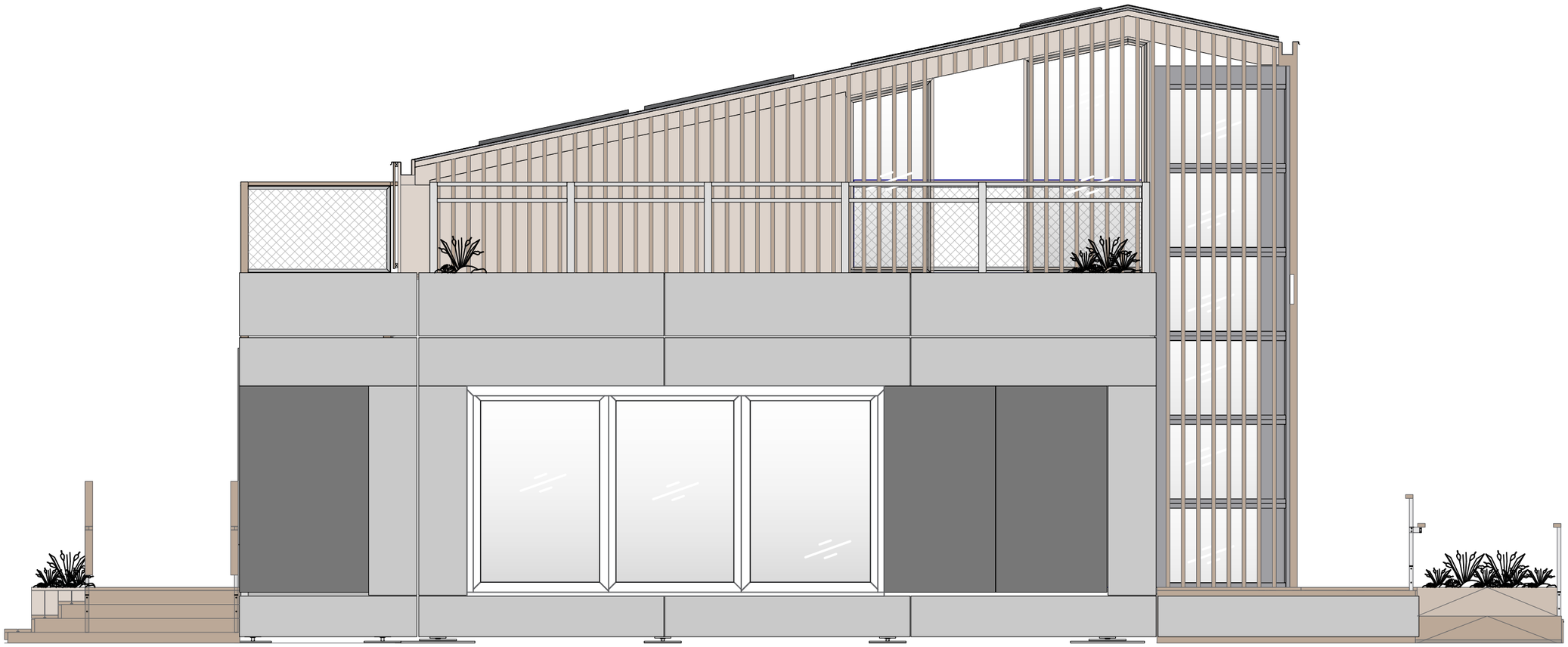

levelup

solar decathlon europe 21

WUPPERTAL GERMANY ...goes urban!

General	GE
Architecture	AR
Interiors	IN
Structural	ST
Plumbing	PL
Solar Water Heating	SW
Mechanical	ME
Electrical	**EL**
Photovoltaic System	PV
Teleco. & Build. Aut. System	BAS
Instrumentation Drawings	ID
Site Operations	SO
Fire Protection	FP
Healthy & Safety	HS
Public Tour	PT

0 0,6 1,3 1,9 2,5

Scale
1:150

Phase
D#6

Drawing Content - HDU
Building Elevation south

AR-2301

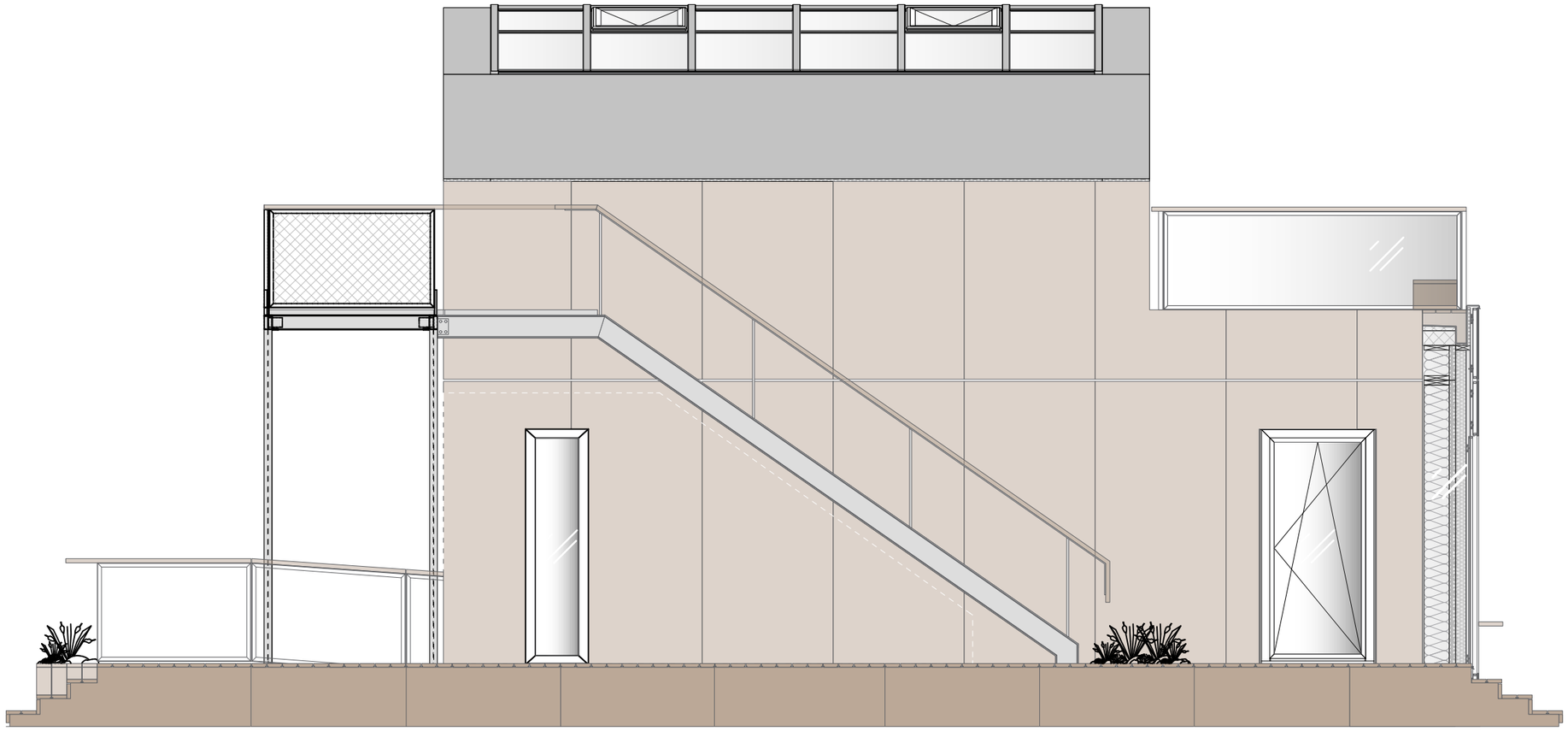

levelup

solar decathlon europe 21

WUPPERTAL GERMANY ...goes urban!

General	GE
Architecture	AR
Interiors	IN
Structural	ST
Plumbing	PL
Solar Water Heating	SW
Mechanical	ME
Electrical	**EL**
Photovoltaic System	PV
Teleco. & Build. Aut. System	BAS
Instrumentation Drawings	ID
Site Operations	SO
Fire Protection	FP
Healthy & Safety	HS
Public Tour	PT

0 0,6 1,3 1,9 2,5

Scale
1:50

Phase
D#6

Drawing Content - HDU
Building Elevation wet

AR-2302

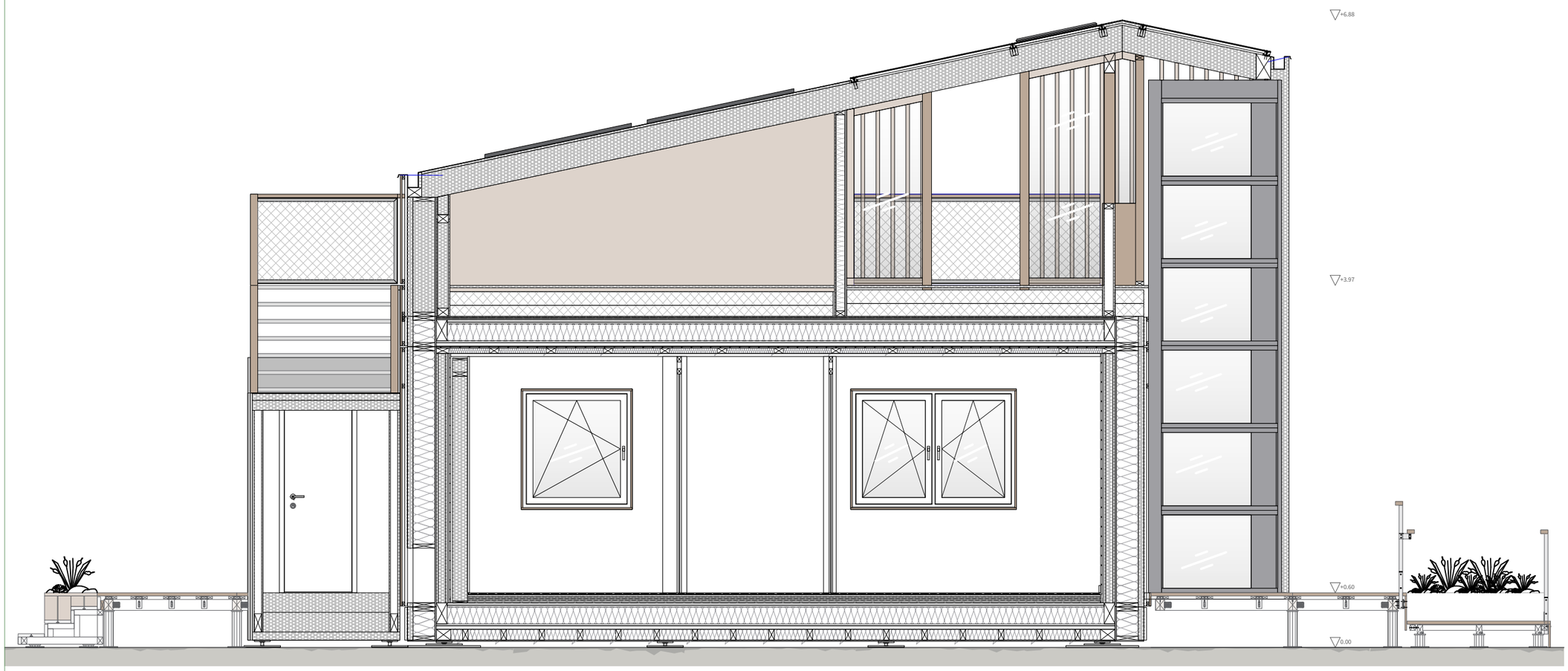

levelup

solar decathlon europe 21
WUPPERTAL GERMANY ...goes urban!

General	GE
Architecture	**AR**
Interiors	IN
Structural	ST
Plumbing	PL
Solar Water Heating	SW
Mechanical	ME
Electrical	EL
Photovoltaic System	PV
Teleco. & Build. Aut. System	BAS
Instrumentation Drawings	ID
Site Operations	SO
Fire Protection	FP
Healthy & Safety	HS
Public Tour	PT

0 0,6 1,3 1,9 2,5

Scale
1:50

Phase
D#6

Drawing Content - HDU
Building section
Section B-B

AR-2401

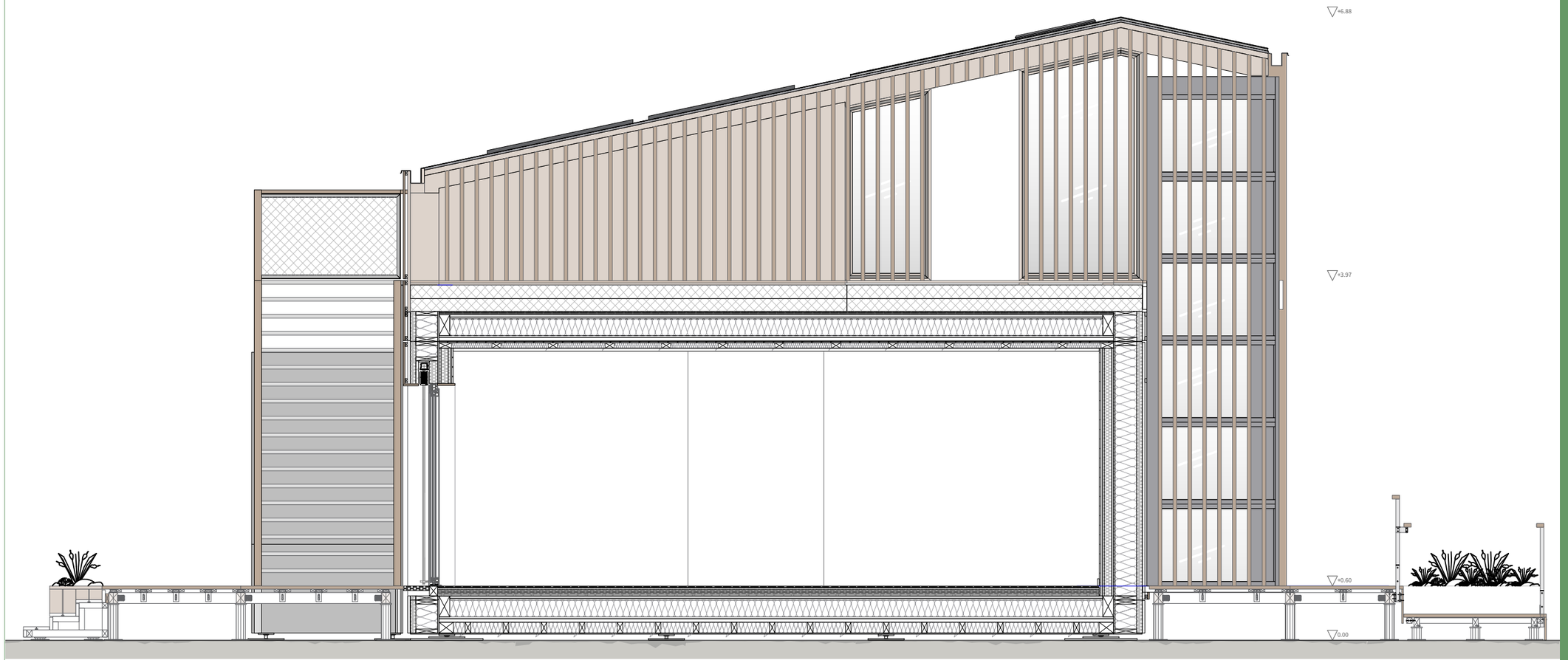

levelup

solar decathlon europe 21
WUPPERTAL GERMANY ...goes urban!

General	GE
Architecture	**AR**
Interiors	IN
Structural	ST
Plumbing	PL
Solar Water Heating	SW
Mechanical	ME
Electrical	EL
Photovoltaic System	PV
Teleco. & Build. Aut. System	BAS
Instrumentation Drawings	ID
Site Operations	SO
Fire Protection	FP
Healthy & Safety	HS
Public Tour	PT

0 0,6 1,3 1,9 2,5

Scale
1:50

Phase
D#6

Drawing Content - HDU
Building section
Section A-A

AR-2402

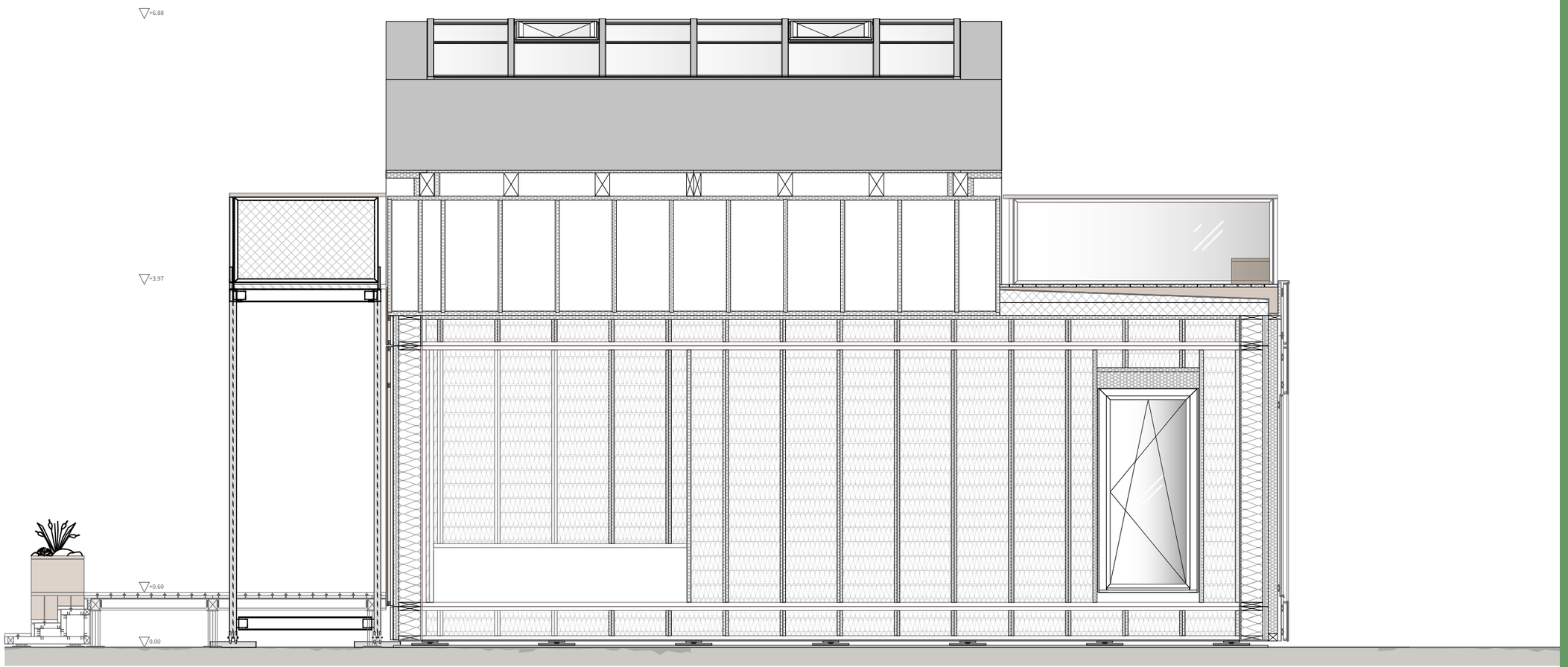

levelup

solar decathlon europe 21
WUPPERTAL GERMANY ...goes urban!

General	GE
Architecture	**AR**
Interiors	IN
Structural	ST
Plumbing	PL
Solar Water Heating	SW
Mechanical	ME
Electrical	EL
Photovoltaic System	PV
Teleco. & Build. Aut. System	BAS
Instrumentation Drawings	ID
Site Operations	SO
Fire Protection	FP
Healthy & Safety	HS
Public Tour	PT

0 0,6 1,3 1,9 2,5

Scale
1:50

Phase
D#6

Drawing Content - HDU
Building section
section 1-1

AR-2403

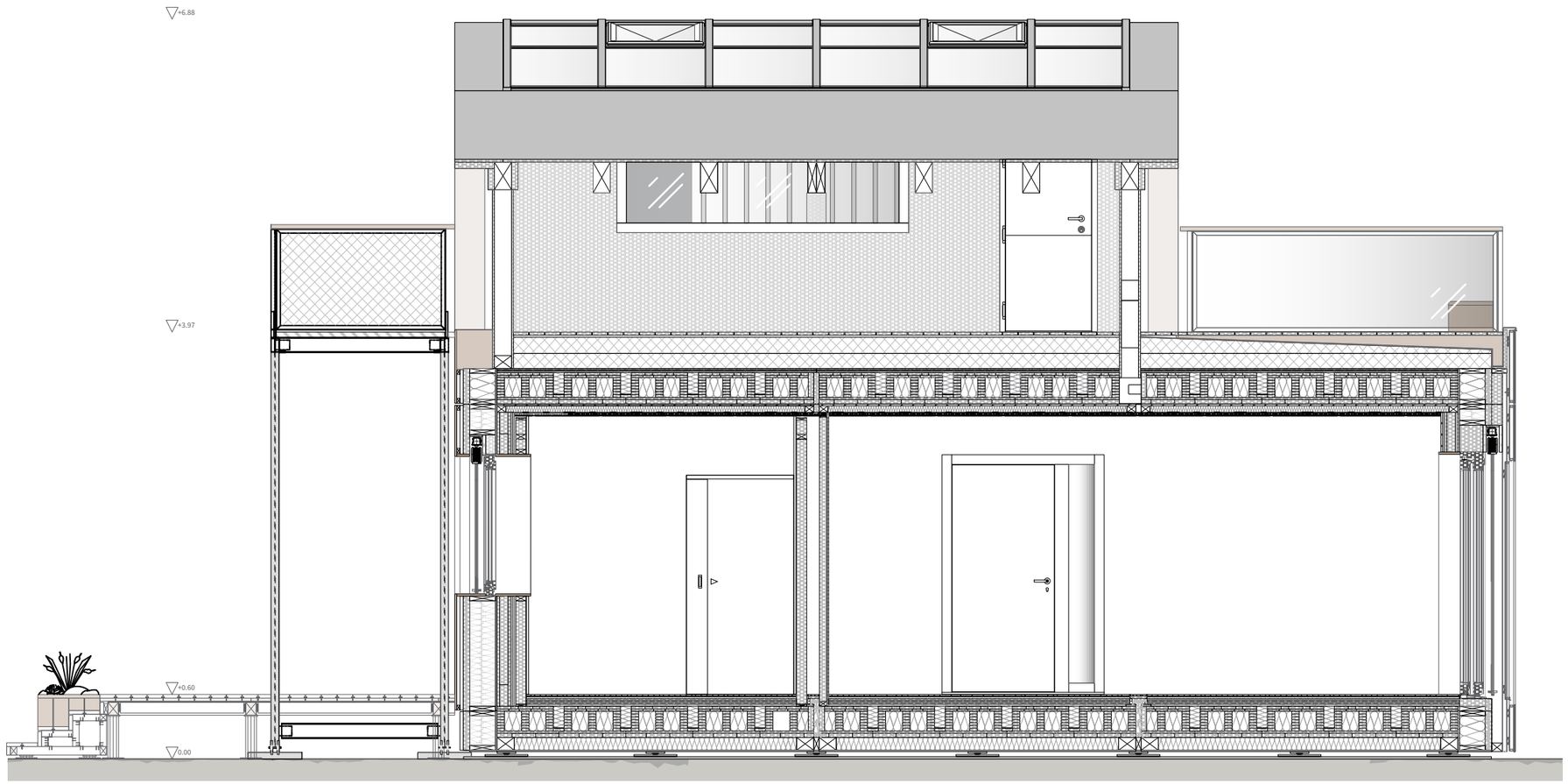

levelup

solar decathlon europe 21
WUPPERTAL GERMANY ...goes urban!

General	GE
Architecture	**AR**
Interiors	IN
Structural	ST
Plumbing	PL
Solar Water Heating	SW
Mechanical	ME
Electrical	EL
Photovoltaic System	PV
Teleco. & Build. Aut. System	BAS
Instrumentation Drawings	ID
Site Operations	SO
Fire Protection	FP
Healthy & Safety	HS
Public Tour	PT

0 0,6 1,3 1,9 2,5

Scale
1:50

Phase
D#6

Drawing Content - HDU
Building section
Section 2-2

AR-2204

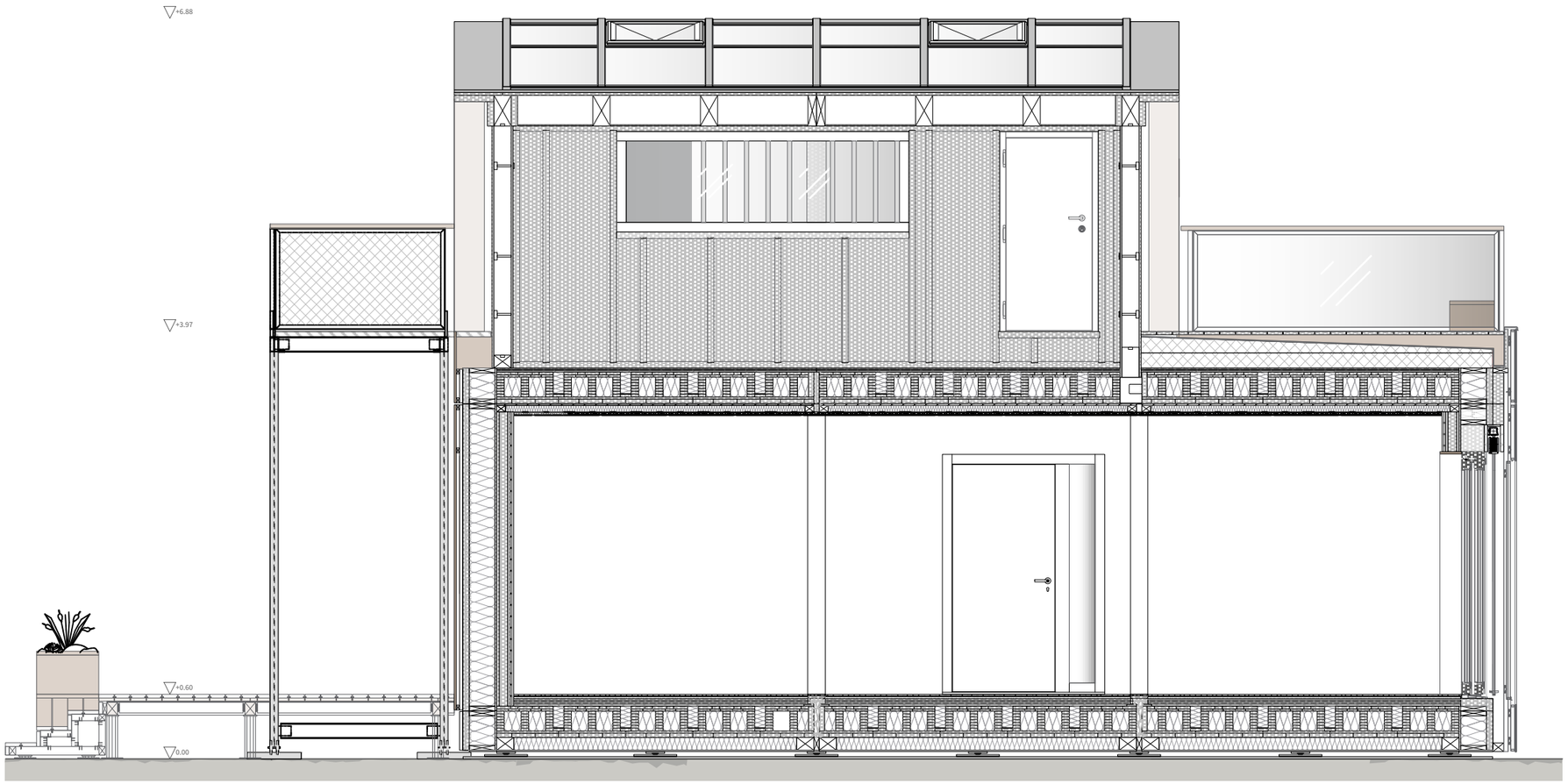

levelup

solar decathlon europe 21
WUPPERTAL GERMANY ...goes urban!

General	GE
Architecture	**AR**
Interiors	IN
Structural	ST
Plumbing	PL
Solar Water Heating	SW
Mechanical	ME
Electrical	EL
Photovoltaic System	PV
Teleco. & Build. Aut. System	BAS
Instrumentation Drawings	ID
Site Operations	SO
Fire Protection	FP
Healthy & Safety	HS
Public Tour	PT

0 0,6 1,3 1,9 2,5

Scale
1:50

Phase
D#6

Drawing Content - HDU
Building section
section 3-3

AR-2405

levelup

solar decathlon europe 21»22
WUPPERTAL GERMANY

Scale

Phase
D#6

Drawing Content
Exterior Rendering
Perspective top south-west view

AR-5001

levelup

solar decathlon europe 21»22
WUPPERTAL GERMANY

Scale

Phase
D#6

Drawing Content
Exterior Rendering
Perspective top north-east view

AR-5002

levelup

solar decathlon europe 21»22
WUPPERTAL GERMANY

Scale

Phase
D#6

Drawing Content
Exterior Rendering
Perspective top south-east view

AR-5003

levelup

solar decathlon europe 21»22
WUPPERTAL GERMANY

Scale

Phase
D#6

Drawing Content
Exterior Rendering
South-west view

AR-5004

levelup

solar decathlon europe 21»22
WUPPERTAL GERMANY

Scale

Phase
D#6

Drawing Content
Exterior Rendering
South-east view

AR-5005

levelup

solar decathlon europe 21»22
WUPPERTAL GERMANY

Scale

Phase
D#6

Drawing Content
Exterior Rendering
North-East view

AR-5006

Interiors (IN)

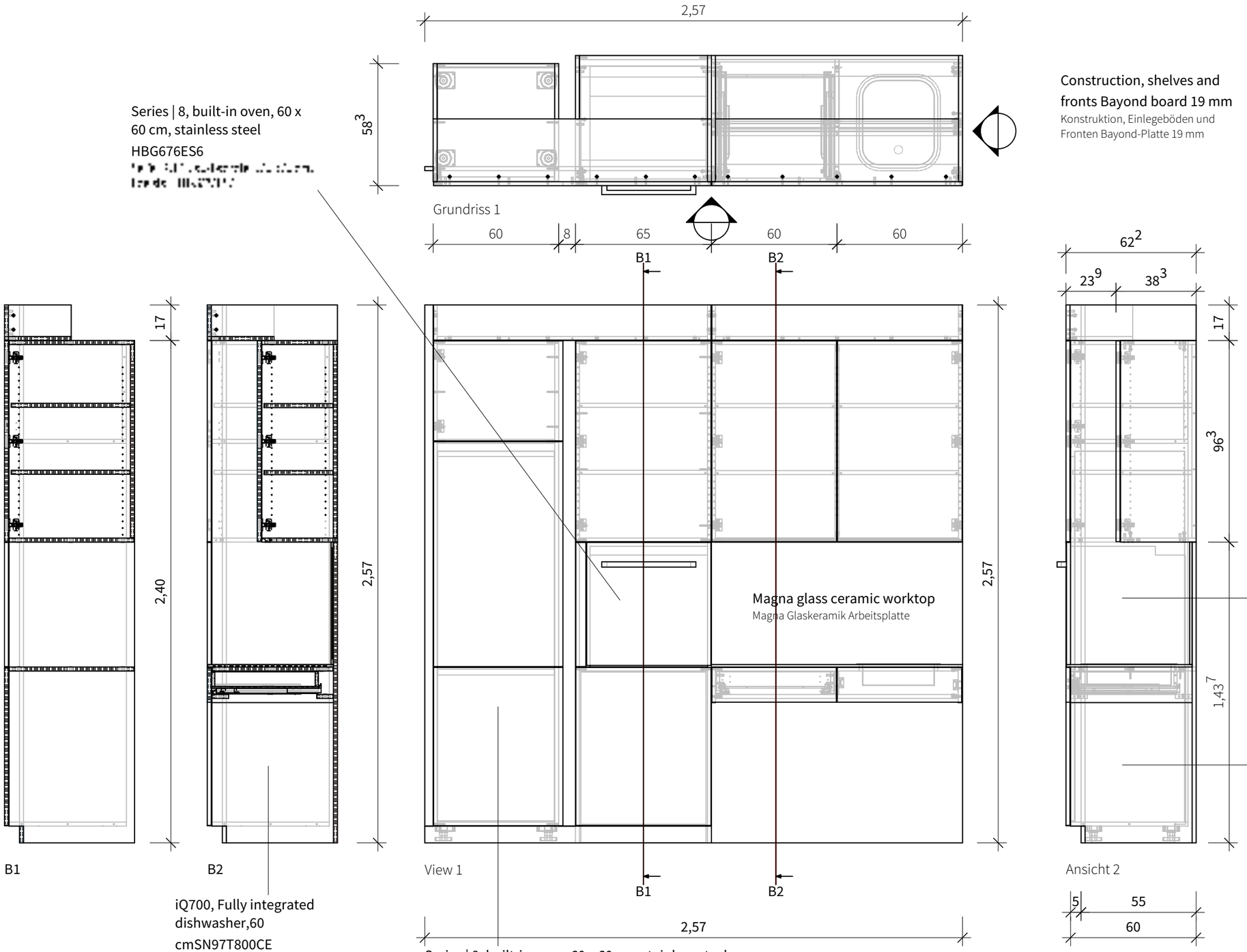

levelup

solar decathlon europe 21

WUPPERTAL GERMANY ...goes urban!

General	GE
Architecture	AR
Interiors	IN
Structural	ST
Plumbing	PL
Solar Water Heating	SW
Mechanical	ME
Electrical	**EL**
Photovoltaic System	PV
Teleco. & Build. Aut. System	BAS
Instrumentation Drawings	ID
Site Operations	SO
Fire Protection	FP
Healthy & Safety	HS
Public Tour	PT

0 0,3 0,5 0,8 1

Scale
1:100

Phase
D#6

Drawing Content - HDU
Kitchen plan view and section

IN-2001
IN-2101

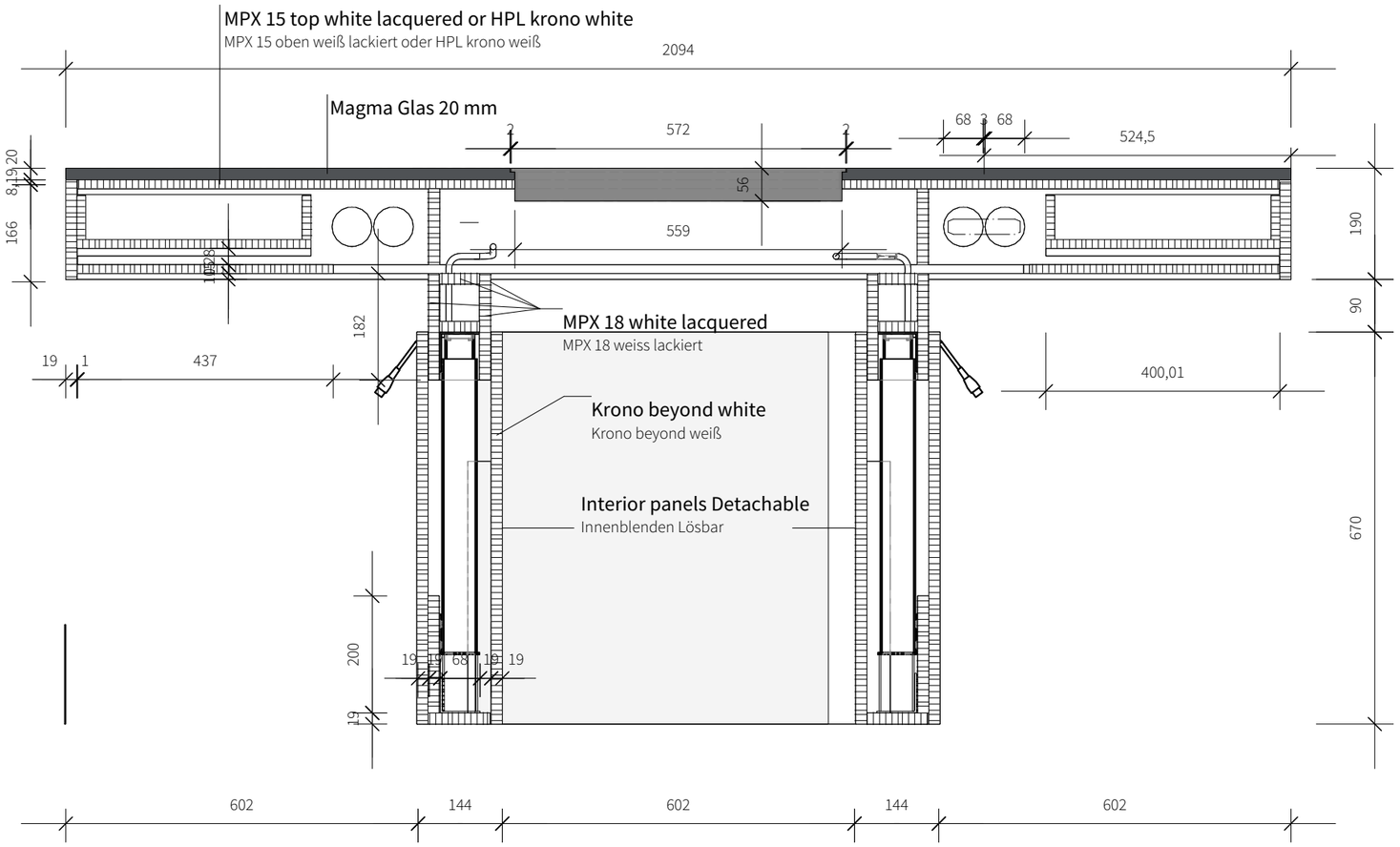

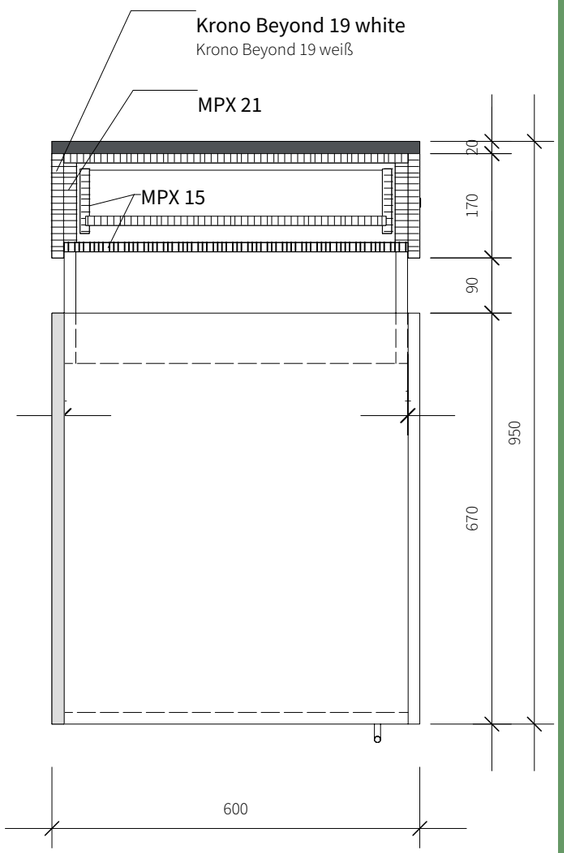

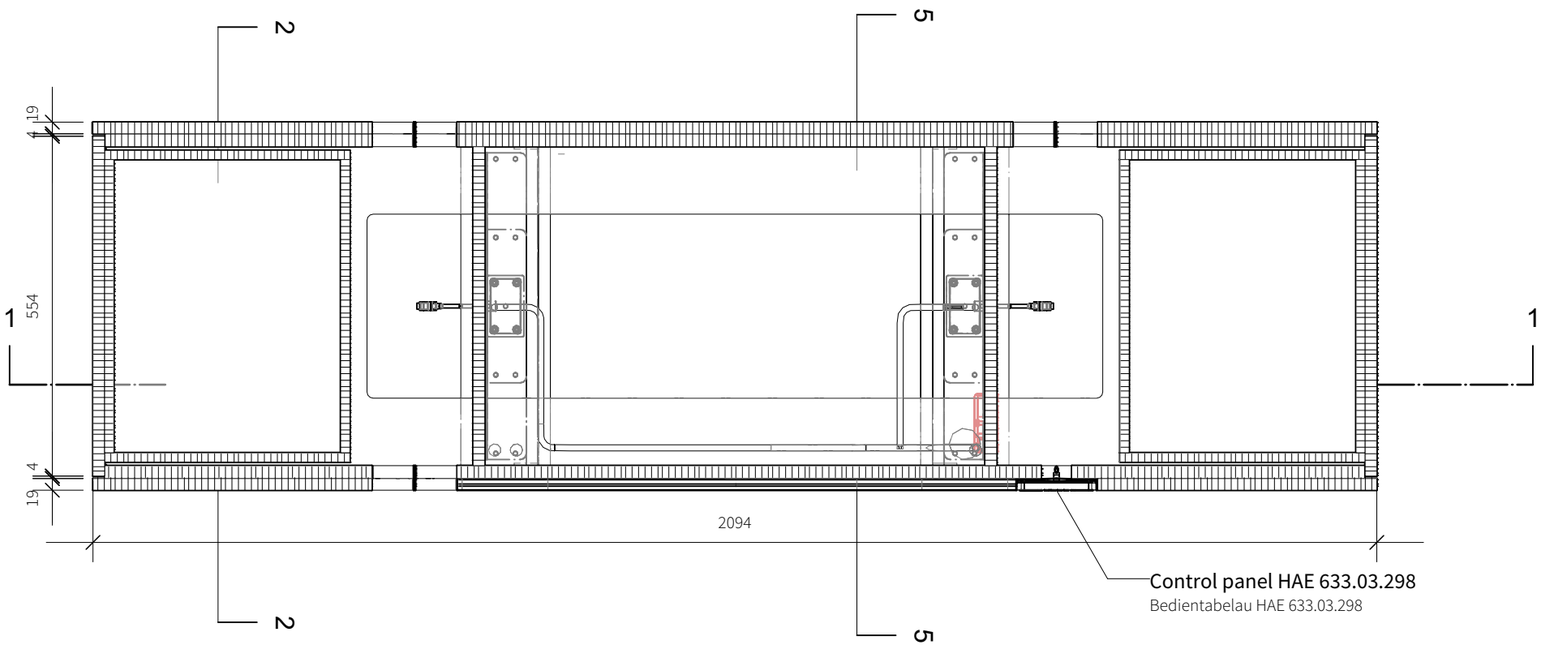

levelup

solar decathlon europe 21
WUPPERTAL GERMANY ...goes urban!

General	GE
Architecture	AR
Interiors	**IN**
Structural	ST
Plumbing	PL
Solar Water Heating	SW
Mechanical	ME
Electrical	EL
Photovoltaic System	PV
Teleco. & Build. Aut. System	BAS
Instrumentation Drawings	ID
Site Operations	SO
Fire Protection	FP
Healthy & Safety	HS
Public Tour	PT

0 0,1 0,3 0,4 0,5

Scale
1:10

Phase
D#6

Drawing Content - HDU
Cooking island

IN-2201

Carcase, fronts and shelves Bayond board 19 mm
Korpus, Fronten und Einlegeböden Bayond-Platte 19 mm

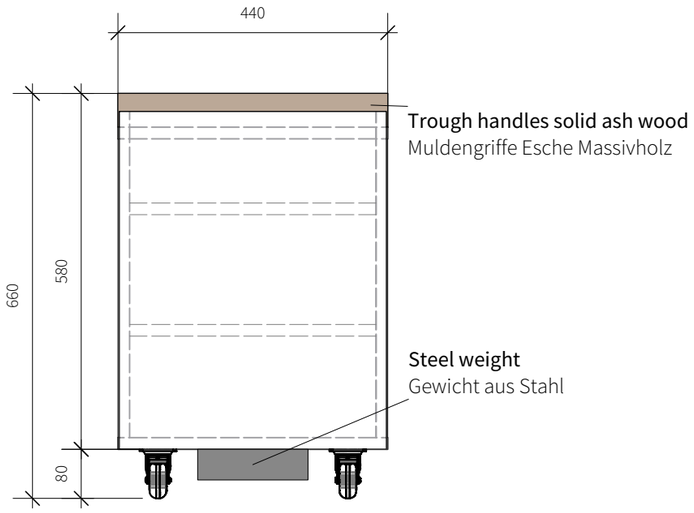

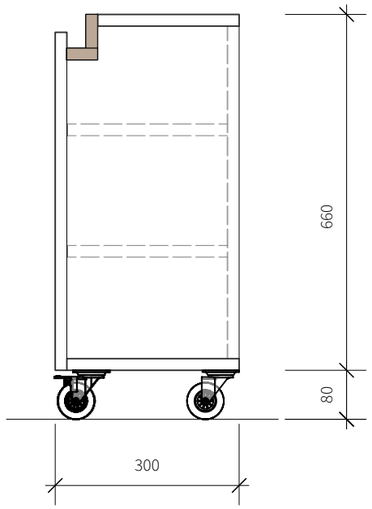

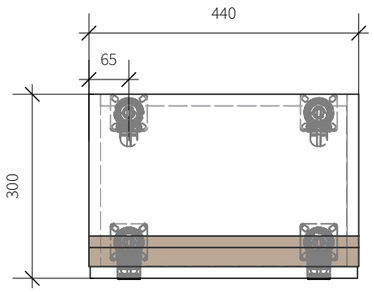

levelup

solar decathlon europe 21
WUPPERTAL GERMANY ...goes urban!

General	GE
Architecture	AR
Interiors	IN
Structural	ST
Plumbing	PL
Solar Water Heating	SW
Mechanical	ME
Electrical	EL
Photovoltaic System	PV
Teleco. & Build. Aut. System	BAS
Instrumentation Drawings	ID
Site Operations	SO
Fire Protection	FP
Healthy & Safety	HS
Public Tour	PT

0 0,1 0,3 0,4 0,5

Scale
1:10

Phase
D#6

Drawing Content - HDU
Container bedroom wardrobe and coat rack

IN-2202

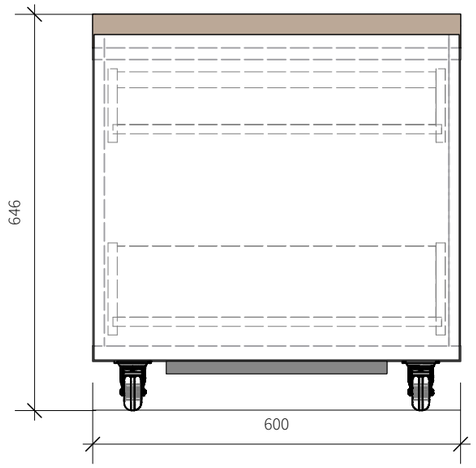

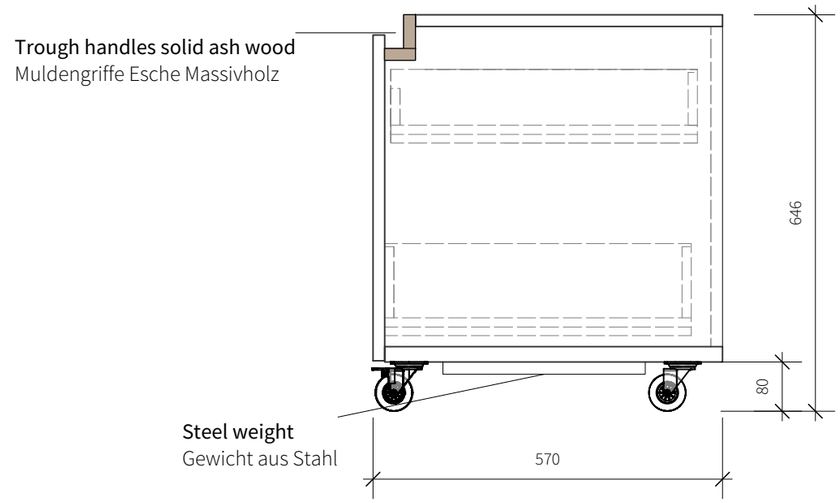

Carcase, fronts and shelves Bayond board 19 mm
Korpus, Fronten und Einlegeböden Bayond-Platte 19 mm

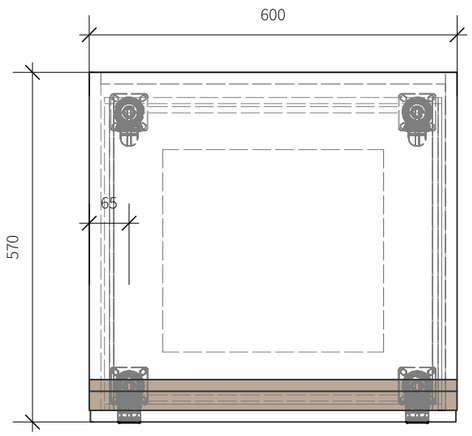

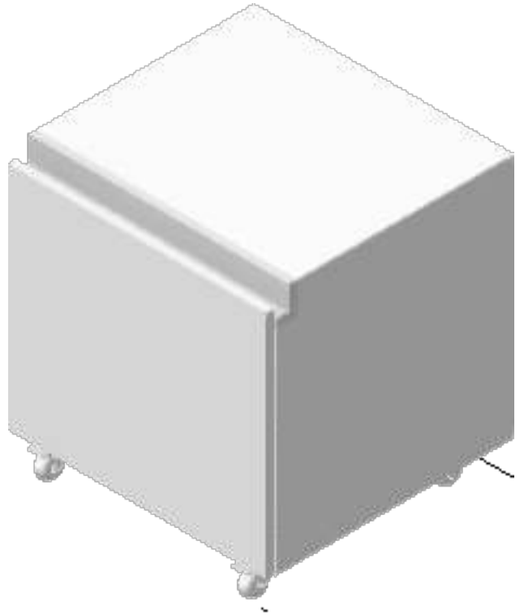

levelup

solar decathlon europe 21
WUPPERTAL GERMANY ...goes urban!

General	GE
Architecture	AR
Interiors	IN
Structural	ST
Plumbing	PL
Solar Water Heating	SW
Mechanical	ME
Electrical	EL
Photovoltaic System	PV
Teleco. & Build. Aut. System	BAS
Instrumentation Drawings	ID
Site Operations	SO
Fire Protection	FP
Healthy & Safety	HS
Public Tour	PT

0 0,1 0,3 0,4 0,5

Scale
1:10

Phase
D#6

Drawing Content - HDU
Container Kitchen

IN-2203

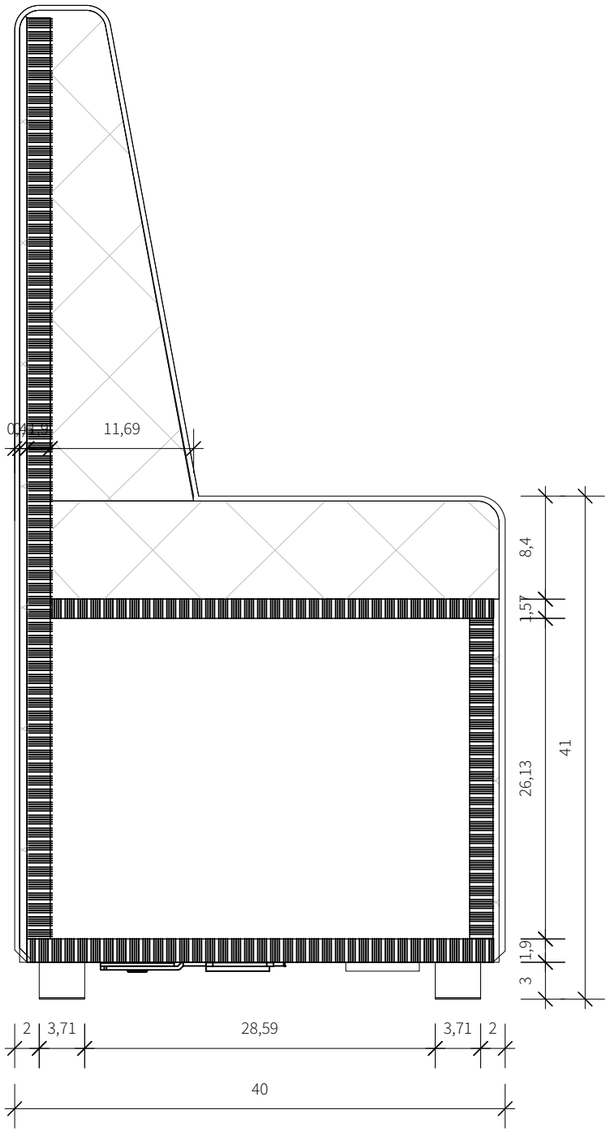

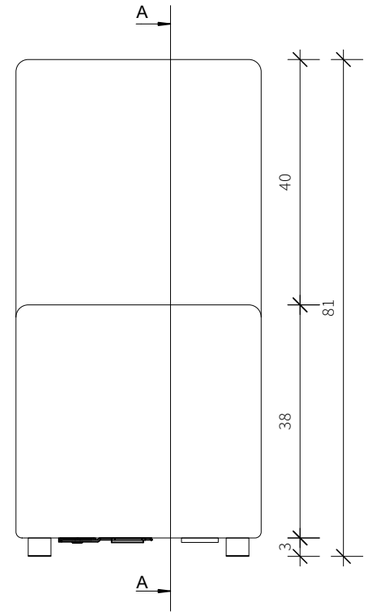

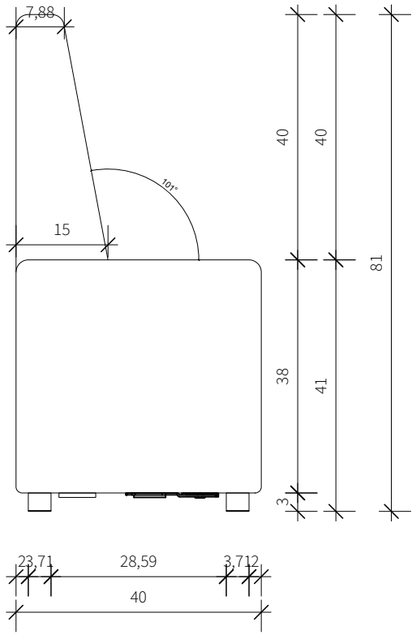

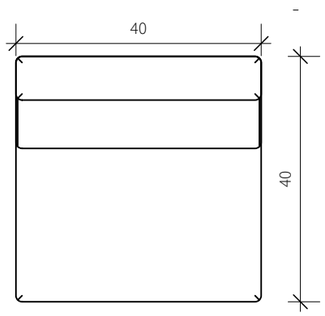

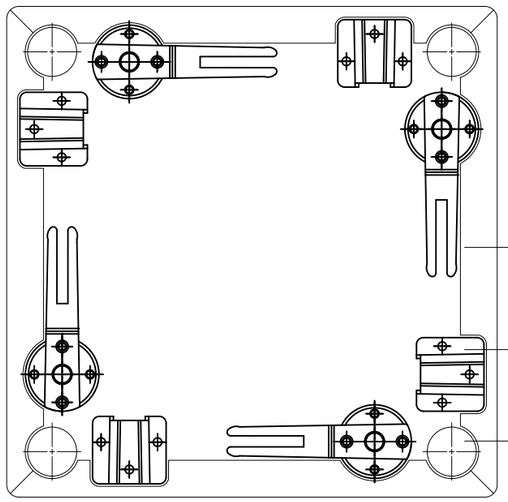

Fabric removable with press studs
Stoff mit Druckknöpfen abnehmbar

Häfele table top connectors
Häfele Tischplattenverbinder

Solid wood feet with felt glides
Massivholzfüße mit Filzgleiter

Cover fabric Backrest
Bezugsstoff Lehne
Manufacturer: Sonnhaus
Collection: 310 Pianino
MOE.POMEZIA 310061/140 UNI
SALBEI

Cover fabric carcass
Bezugsstoff Korpus
Manufacturer: Sonnhaus
Collection: 310 Pianino
MOE.POMEZIA 310074/140 UNI
MINT

levelup

solar decathlon europe 21
WUPPERTAL GERMANY ...goes urban!

General	GE
Architecture	AR
Interiors	**IN**
Structural	ST
Plumbing	PL
Solar Water Heating	SW
Mechanical	ME
Electrical	EL
Photovoltaic System	PV
Teleco. & Build. Aut. System	BAS
Instrumentation Drawings	ID
Site Operations	SO
Fire Protection	FP
Healthy & Safety	HS
Public Tour	PT

0 0,1 0,1 0,2 0,3

Scale
1:5, 1:10

Phase
D#6

Drawing Content - HDU
Furnishing
Upholstered element with backrest

IN-4001

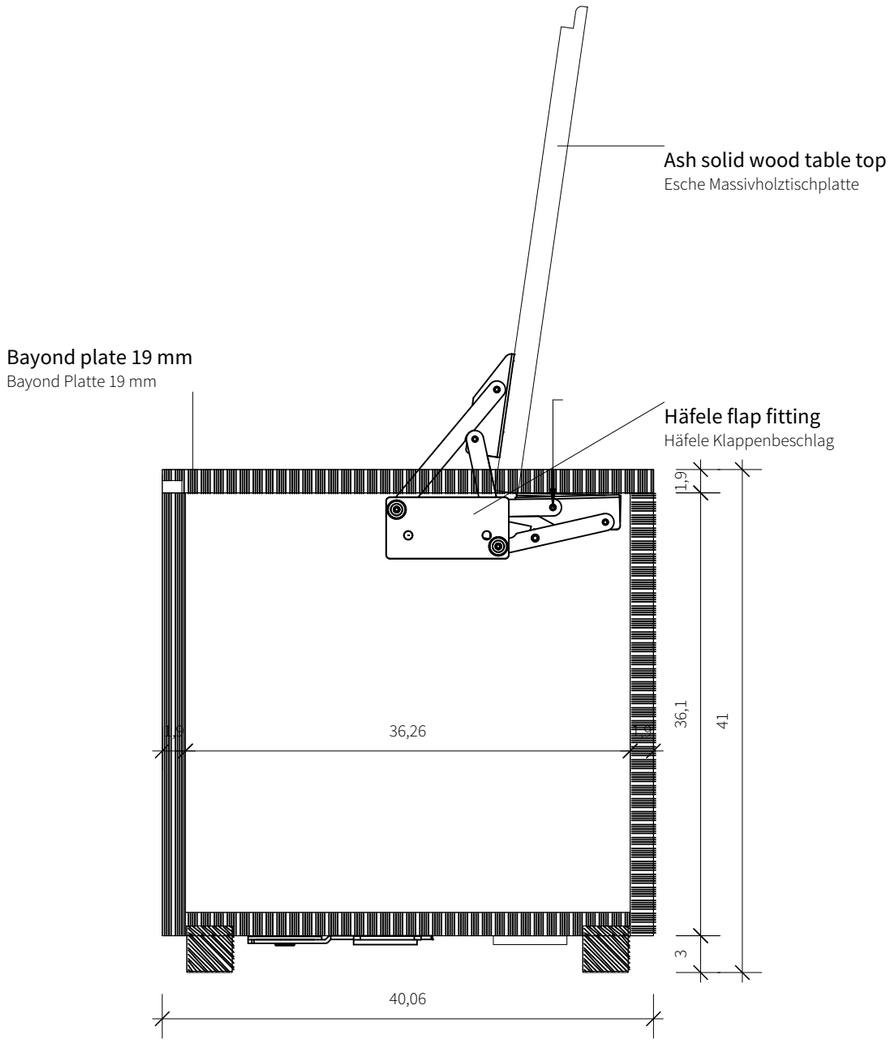

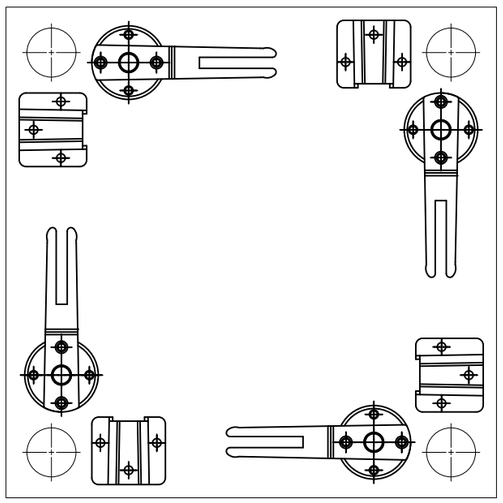

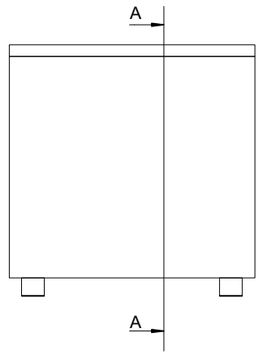

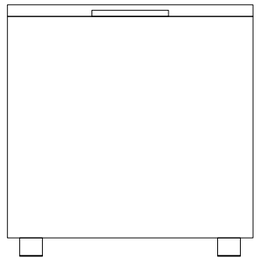

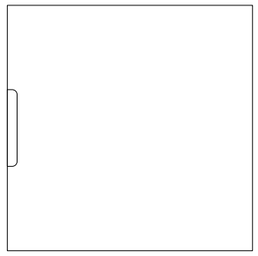

levelup

solar decathlon europe 21
WUPPERTAL GERMANY ...goes urban!

General	GE
Architecture	AR
Interiors	**IN**
Structural	ST
Plumbing	PL
Solar Water Heating	SW
Mechanical	ME
Electrical	EL
Photovoltaic System	PV
Teleco. & Build. Aut. System	BAS
Instrumentation Drawings	ID
Site Operations	SO
Fire Protection	FP
Healthy & Safety	HS
Public Tour	PT

0 0,1 0,3 0,4 0,5

Scale
1:5

Phase
D#6

Drawing Content - HDU
Furnishing
Couch element table

IN-4002

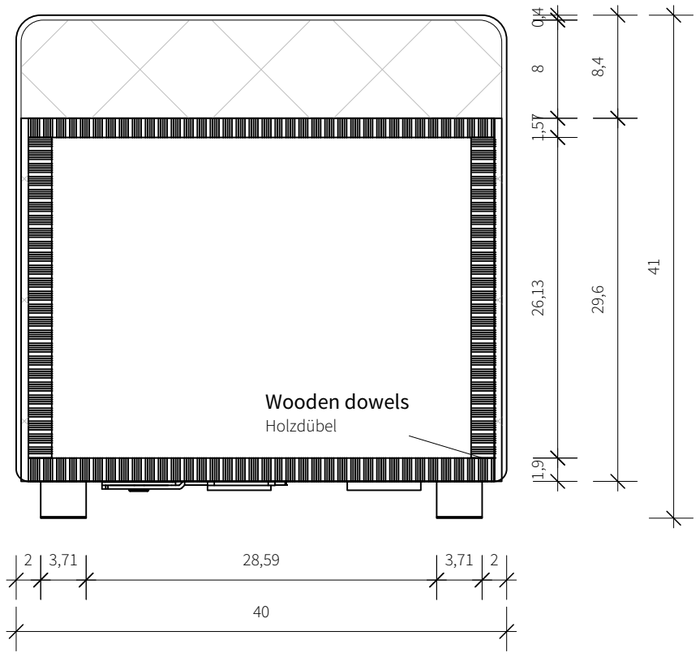

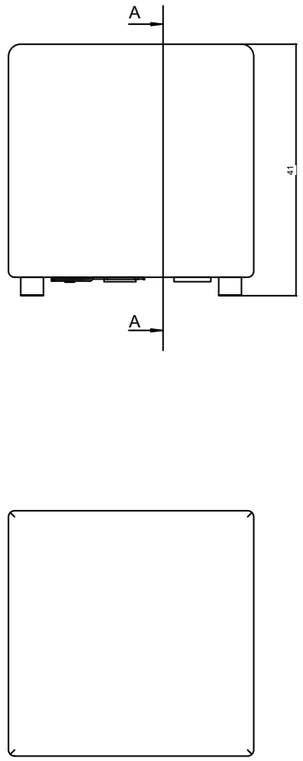

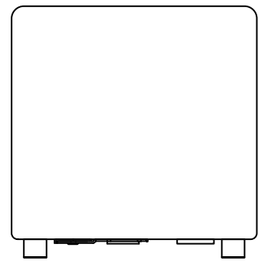

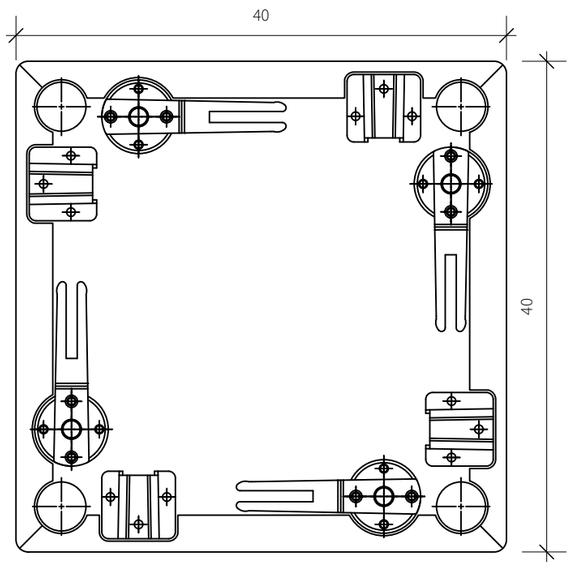

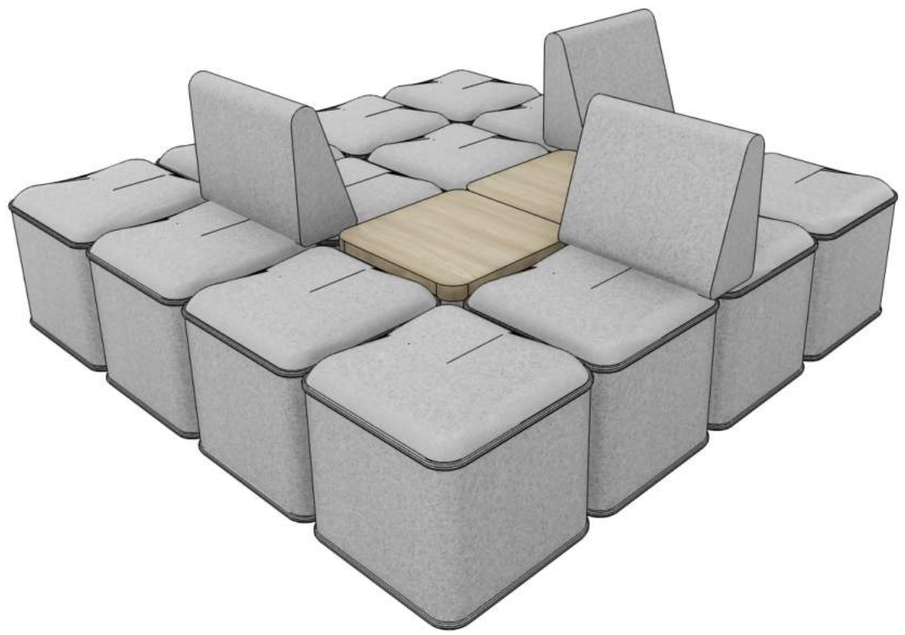

levelup

solar decathlon europe 21
WUPPERTAL GERMANY ...goes urban!

General	GE
Architecture	AR
Interiors	**IN**
Structural	ST
Plumbing	PL
Solar Water Heating	SW
Mechanical	ME
Electrical	EL
Photovoltaic System	PV
Teleco. & Build. Aut. System	BAS
Instrumentation Drawings	ID
Site Operations	SO
Fire Protection	FP
Healthy & Safety	HS
Public Tour	PT

0 0,1 0,1 0,2 0,2

Scale
1:5

Phase
D#6

Drawing Content - HDU
Furnishing
Element without backrest

IN-4003

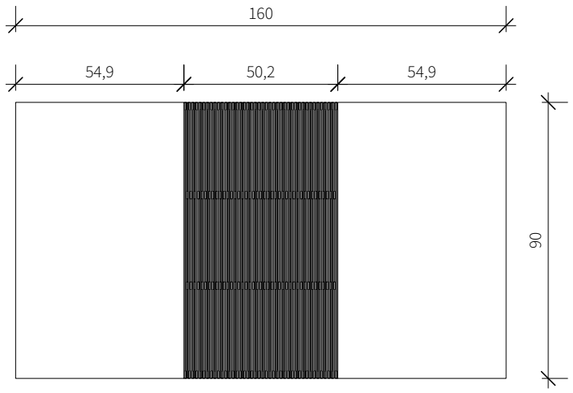

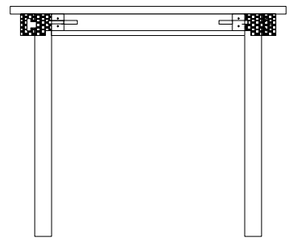

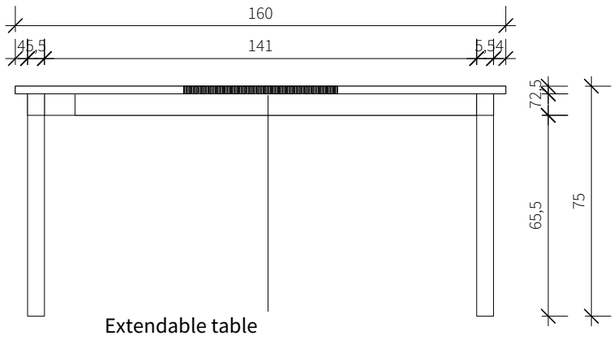

Extendable table
ausziehbarer Tisch

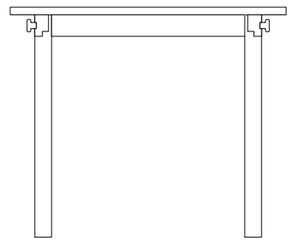

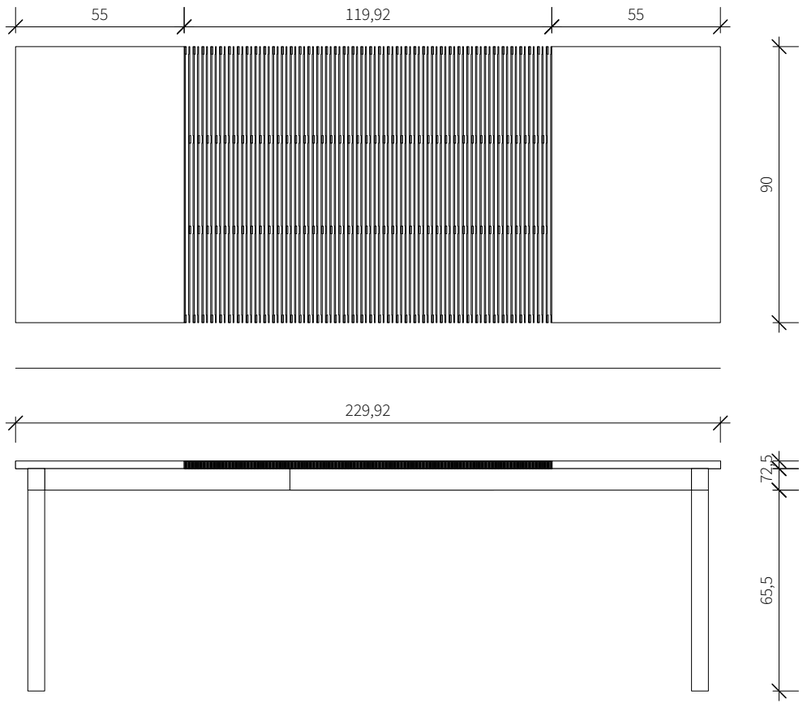

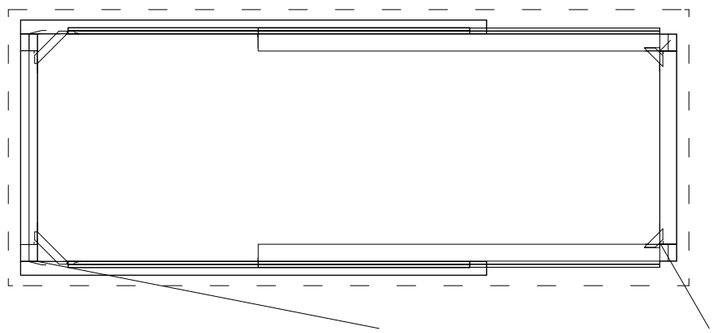

Ash solid wood table, glue-free and metal-free connection
Esche Massivholztisch, leimfreie und metallfreie Verbindung

levelup

solar decathlon europe 21
WUPPERTAL GERMANY ...goes urban!

General	GE
Architecture	AR
Interiors	**IN**
Structural	ST
Plumbing	PL
Solar Water Heating	SW
Mechanical	ME
Electrical	EL
Photovoltaic System	PV
Teleco. & Build. Aut. System	BAS
Instrumentation Drawings	ID
Site Operations	SO
Fire Protection	FP
Healthy & Safety	HS
Public Tour	PT

0 0,3 0,5 0,8 1

Scale
1:20

Phase
D#6

Drawing Content - HDU
Furnishing
Dining table

IN-4004

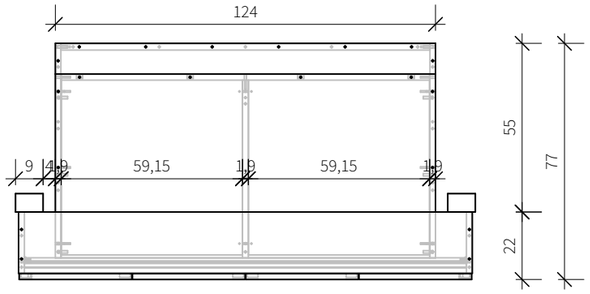

floor plan

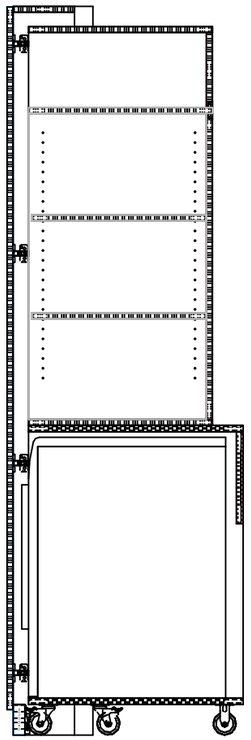

Section B-B

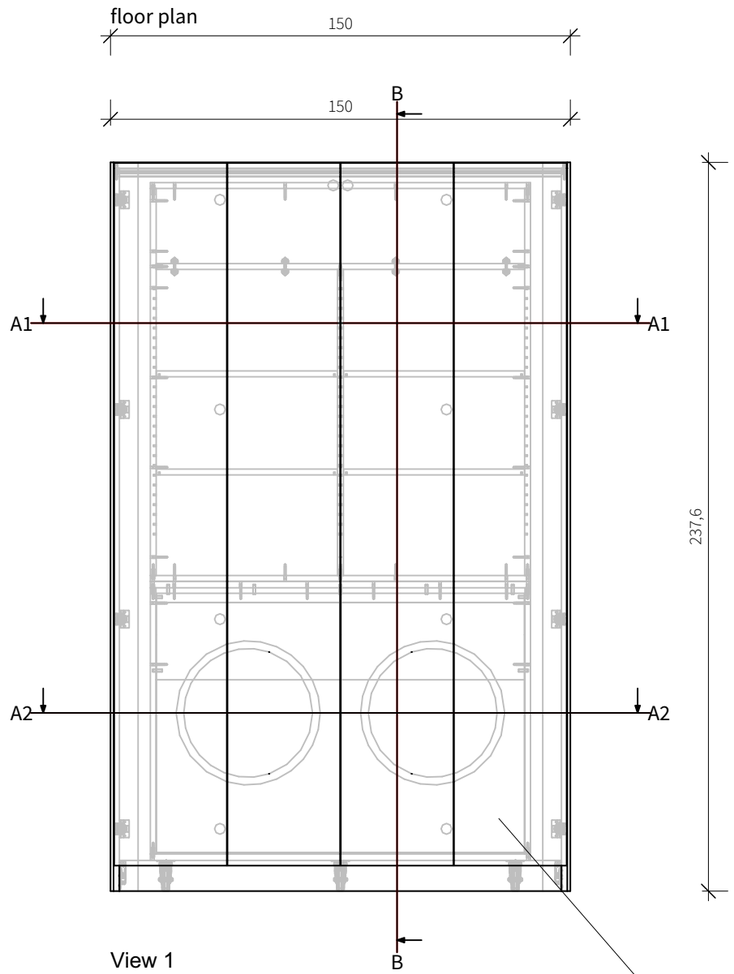

View 1

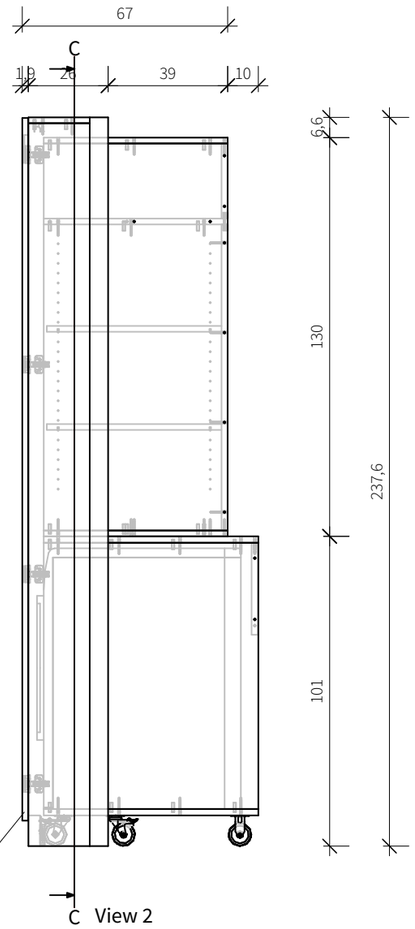

View 2

Bayond plate
Bayond Platte

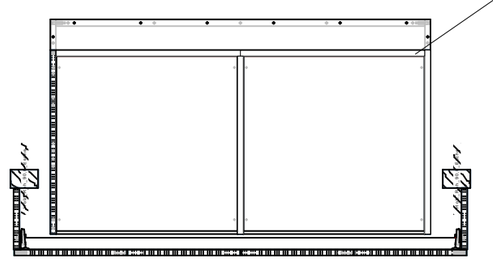

A1

levelup

solar decathlon europe 21
WUPPERTAL GERMANY ...goes urban!

General	GE
Architecture	AR
Interiors	**IN**
Structural	ST
Plumbing	PL
Solar Water Heating	SW
Mechanical	ME
Electrical	EL
Photovoltaic System	PV
Teleco. & Build. Aut. System	BAS
Instrumentation Drawings	ID
Site Operations	SO
Fire Protection	FP
Healthy & Safety	HS
Public Tour	PT

0 0,3 0,5 0,8 1

Scale
1:20

Phase
D#6

Drawing Content - HDU
Furnishing
Hall cupboard

IN-4005

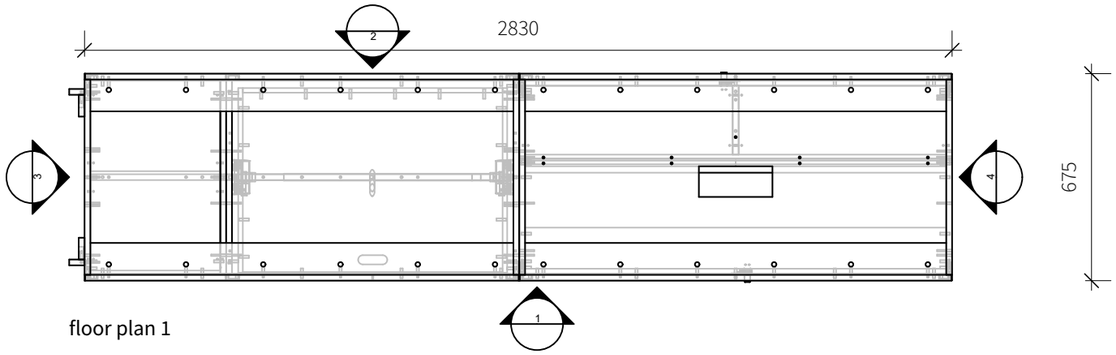

floor plan 1

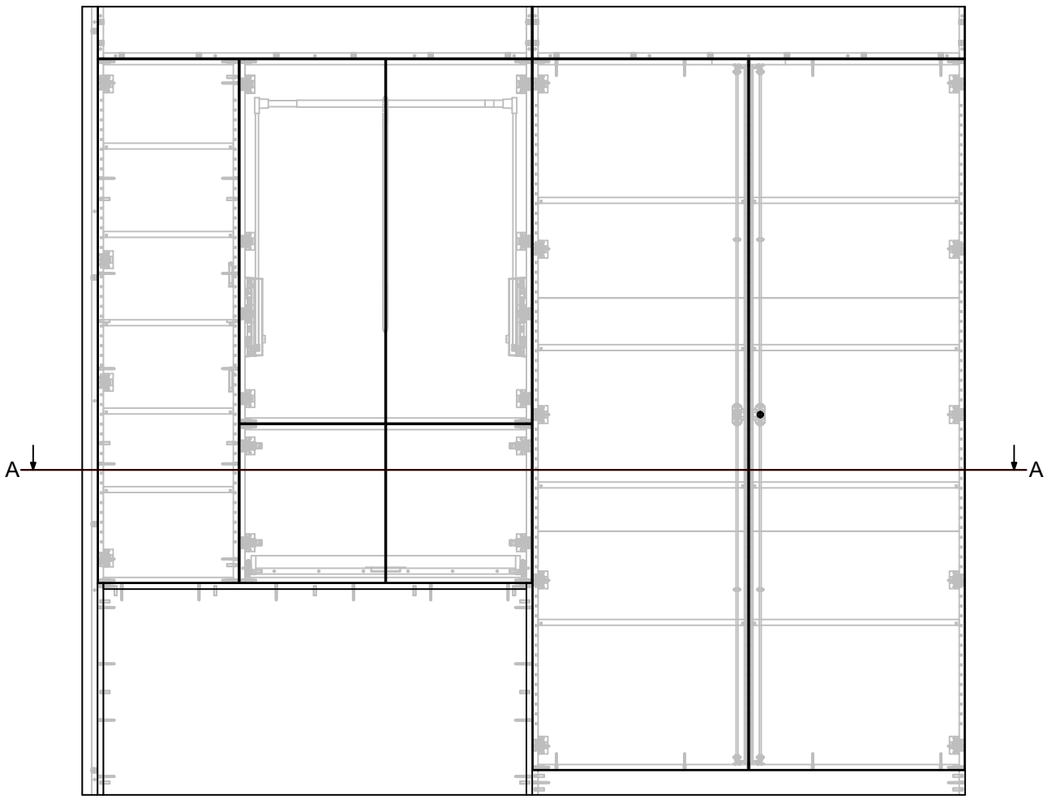

view 1

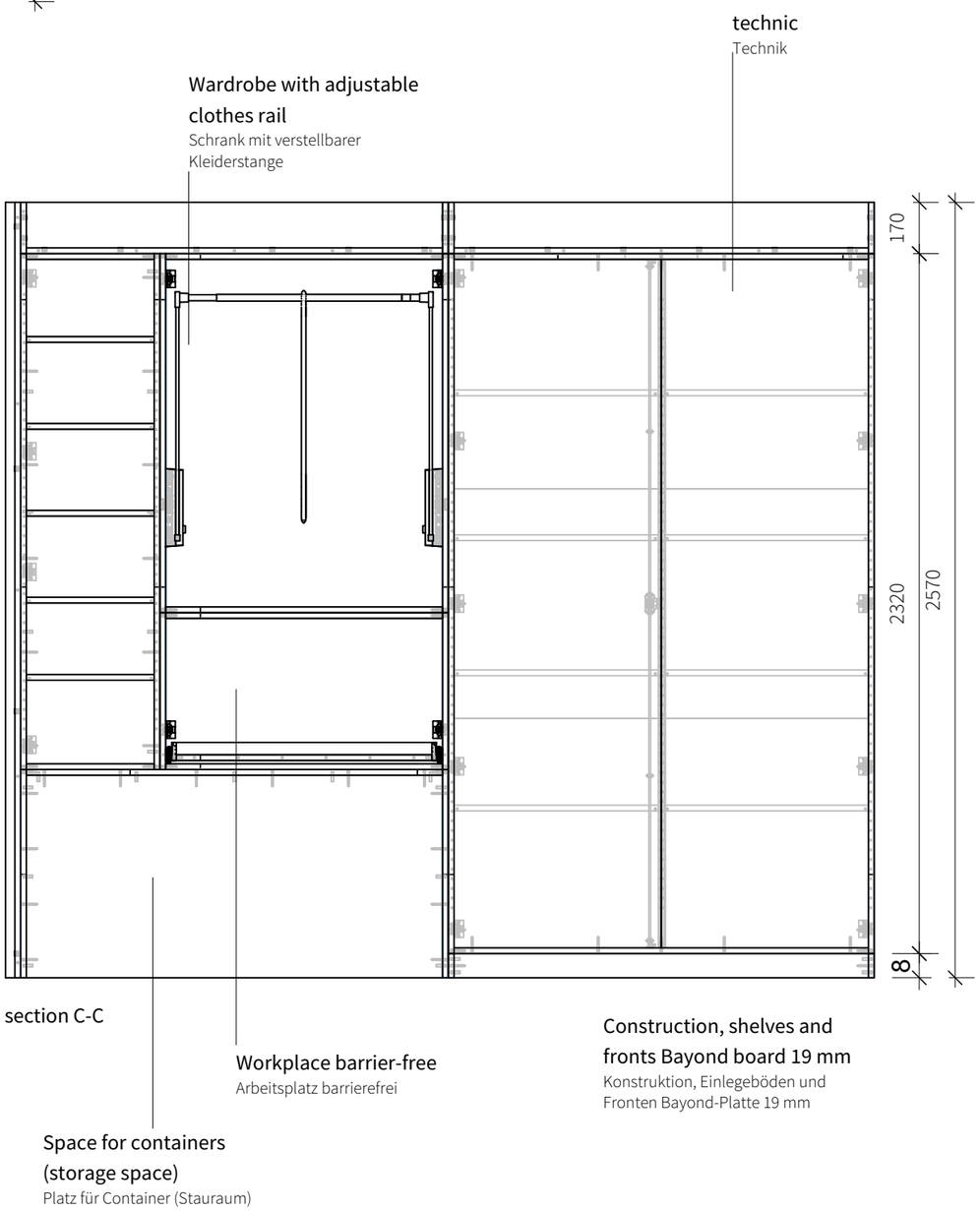

section C-C

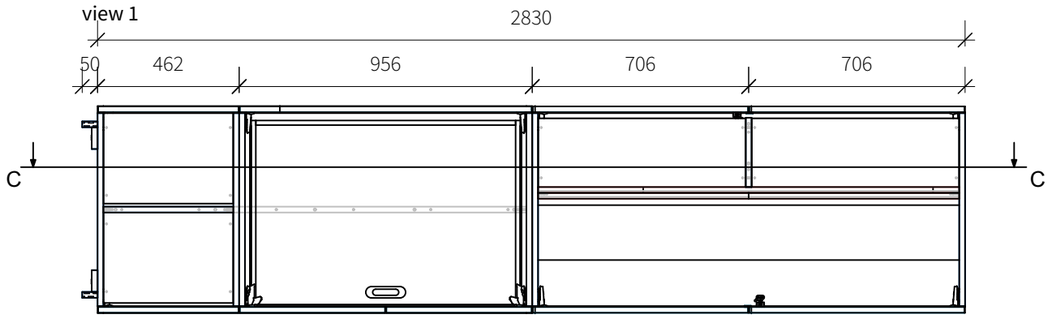

section A-A

levelup

solar decathlon europe 21
WUPPERTAL GERMANY ...goes urban!

General	GE
Architecture	AR
Interiors	**IN**
Structural	ST
Plumbing	PL
Solar Water Heating	SW
Mechanical	ME
Electrical	EL
Photovoltaic System	PV
Teleco. & Build. Aut. System	BAS
Instrumentation Drawings	ID
Site Operations	SO
Fire Protection	FP
Healthy & Safety	HS
Public Tour	PT

0 0,3 0,5 0,8 1

Scale
1:20

Phase
D#6

Drawing Content - HDU
Furnishing
Bedroom wardrobe

IN-4006

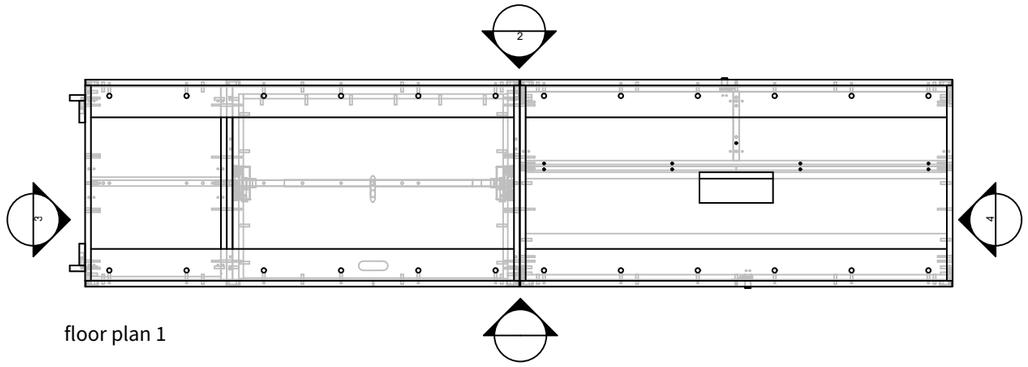

floor plan 1

Construction, shelves and fronts Bayond board 19 mm

Konstruktion, Einlegeböden und Fronten Bayond-Platte 19 mm

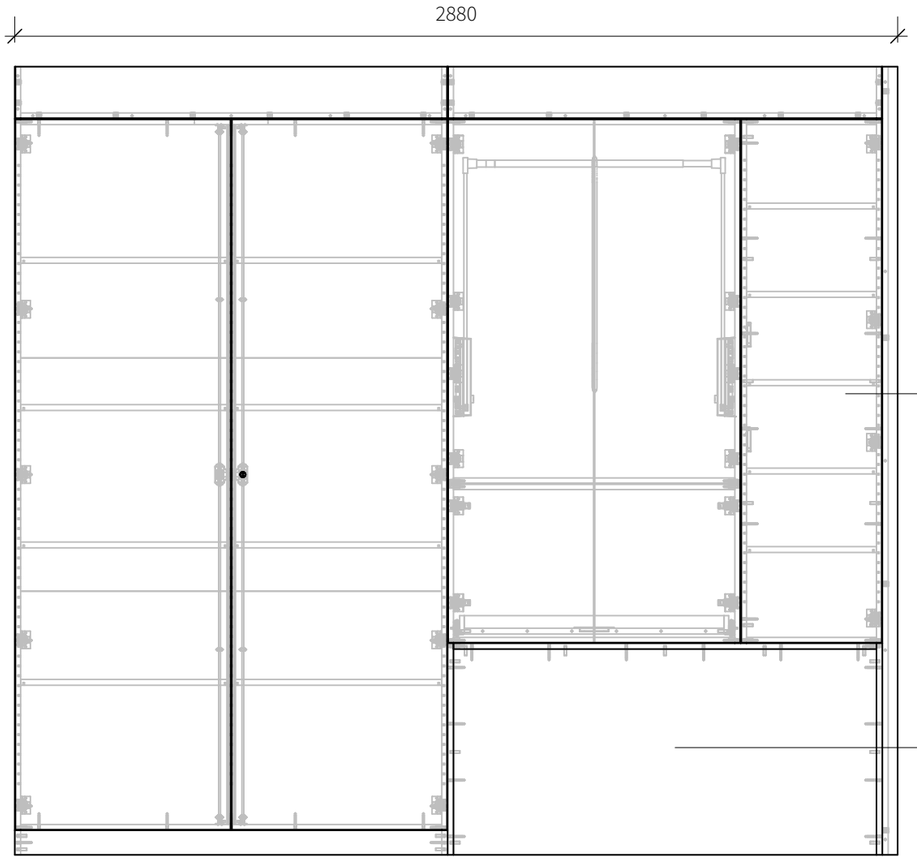

view 1

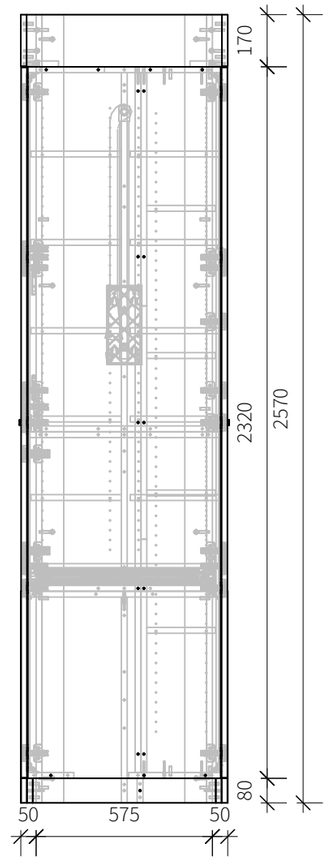

view 4

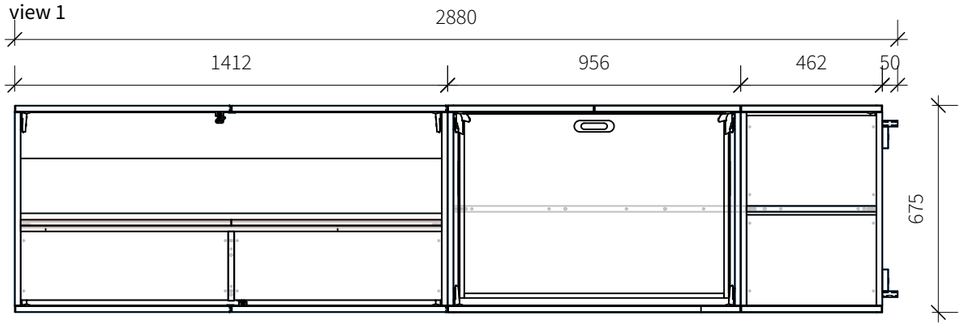

section A-A

levelup

solar decathlon europe 21

WUPPERTAL GERMANY ...goes urban!

General	GE
Architecture	AR
Interiors	IN
Structural	ST
Plumbing	PL
Solar Water Heating	SW
Mechanical	ME
Electrical	EL
Photovoltaic System	PV
Teleco. & Build. Aut. System	BAS
Instrumentation Drawings	ID
Site Operations	SO
Fire Protection	FP
Healthy & Safety	HS
Public Tour	PT

0 0,3 0,5 0,8 1

Scale
1:100

Phase
D#6

Drawing Content - HDU
Furnishing
Wardrobe entrance

IN-4007

Ceiling diffuser Functional diagram

Deckenauslass Funktionsschema

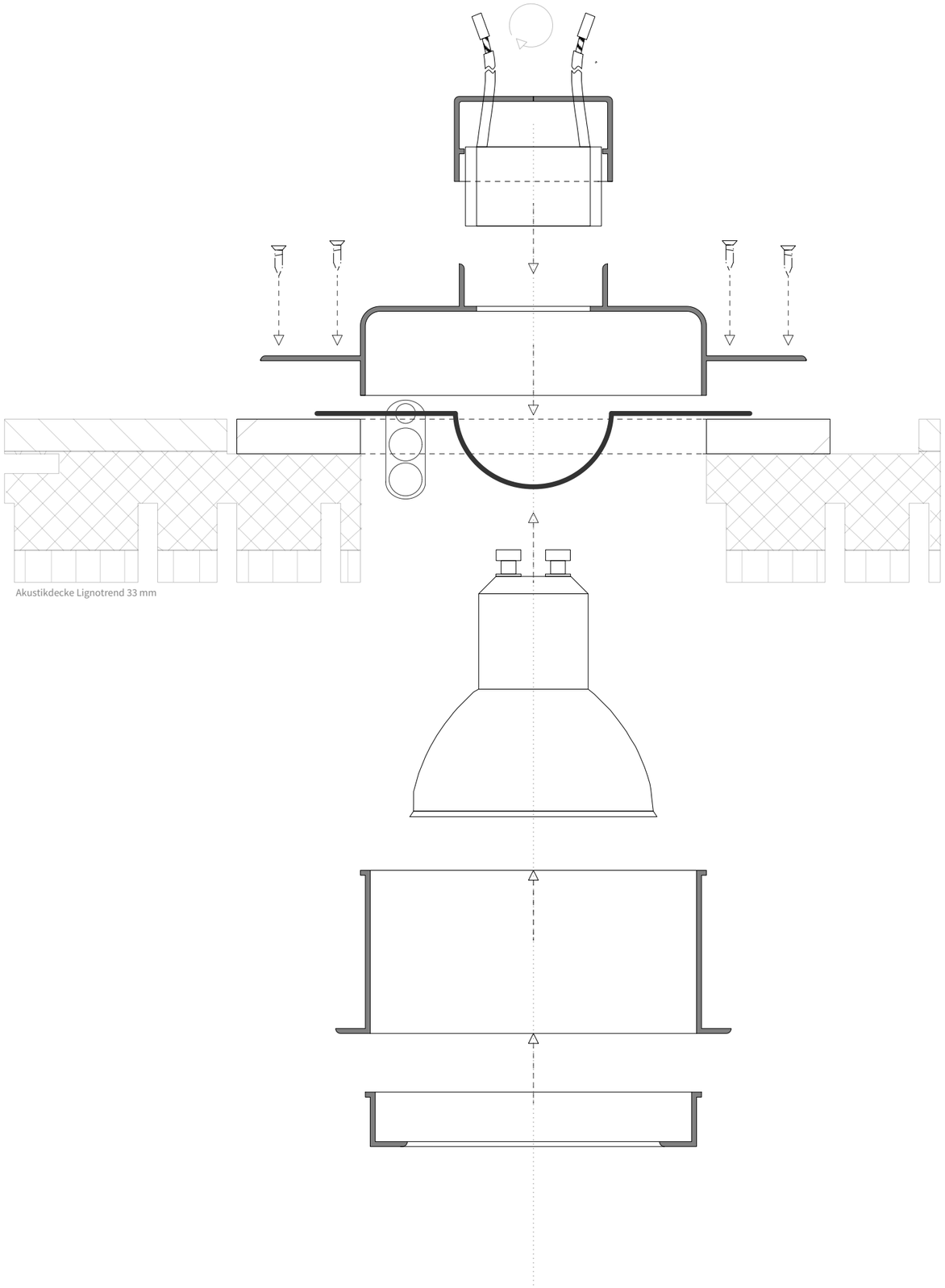

levelup

solar decathlon europe 21

WUPPERTAL GERMANY ...goes urban!

Scale
1:1

Phase
D#6

Drawing Content - HDU
Outlet ceiling box schema

IN-4008

levelup

solar decathlon europe 21-22
WUPPERTAL GERMANY

Scale

Phase
D#6

Drawing Content
Interior Rendering

IN-5001

levelup

solar decathlon europe 21-22
WUPPERTAL GERMANY

Scale

Phase
D#6

Drawing Content
Interior Rendering

IN-5002

levelup

solar decathlon europe 21-22
WUPPERTAL GERMANY

Scale

Phase
D#6

Drawing Content
Interior Rendering

IN-5003

levelup

solar decathlon europe 21-22
WUPPERTAL GERMANY

Scale

Phase
D#6

Drawing Content
Interior Rendering

IN-5004

levelup

solar decathlon europe 21-22
WUPPERTAL GERMANY

Scale

Phase
D#6

Drawing Content
Interior Rendering

IN-5005

levelup

solar decathlon europe 21-22
WUPPERTAL GERMANY

Scale

Phase
D#6

Drawing Content
Interior Rendering

IN-5006

levelup

solar decathlon europe 21-22
WUPPERTAL GERMANY

Scale

Phase
D#6

Drawing Content
Interior Rendering

IN-5007

Structural (ST)

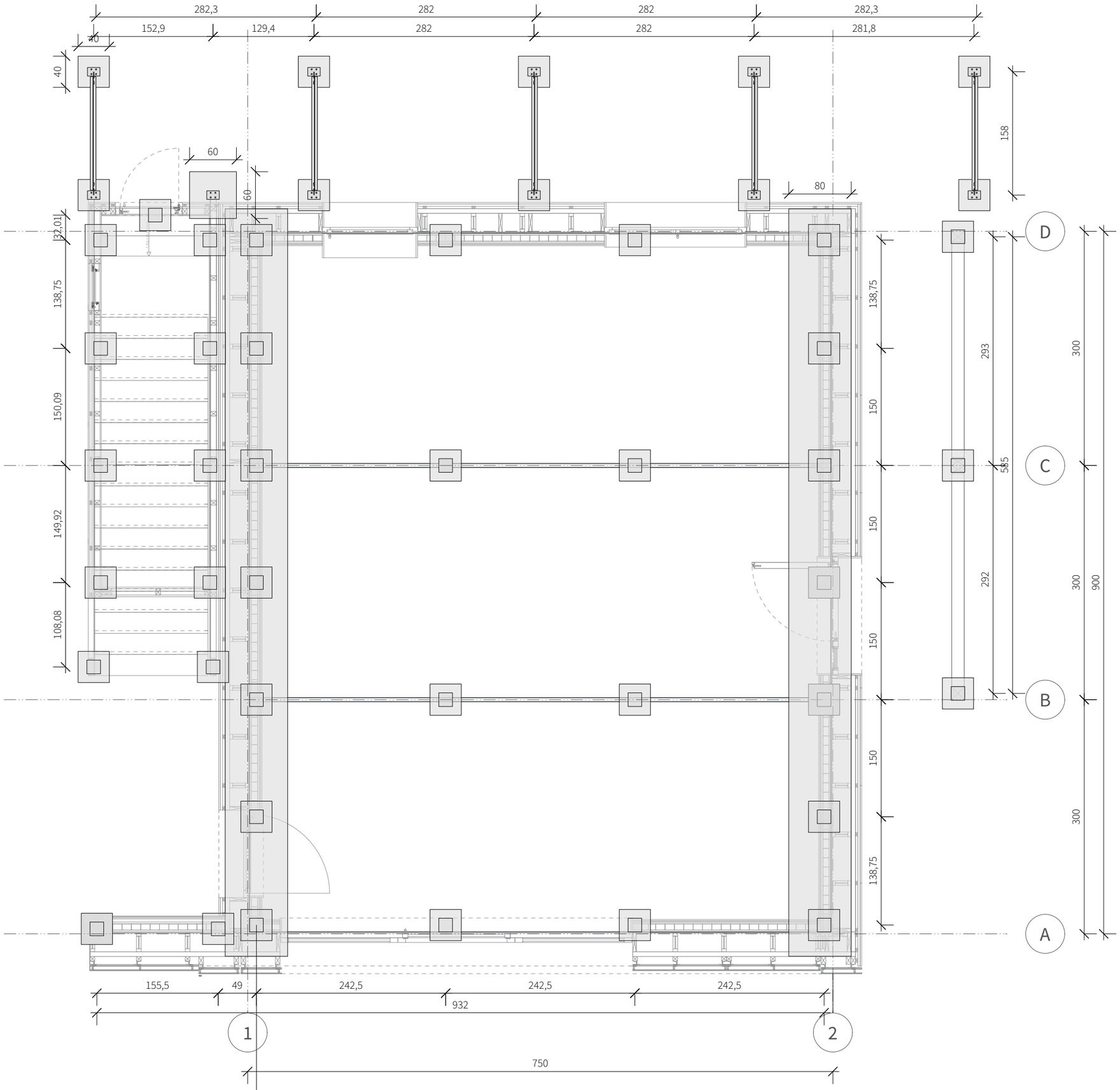

levelup

solar decathlon europe 21

WUPPERTAL GERMANY ...goes urban!

General	GE
Architecture	AR
Interiors	IN
Structural	**ST**
Plumbing	PL
Solar Water Heating	SW
Mechanical	ME
Electrical	EL
Photovoltaic System	PV
Teleco. & Build. Aut. System	BAS
Instrumentation Drawings	ID
Site Operations	SO
Fire Protection	FP
Healthy & Safety	HS
Public Tour	PT

0 0,6 1,3 1,9 2,5

Scale
1:50

Phase
D#6

Drawing Content - HDU
Foundation Plan

ST-1001

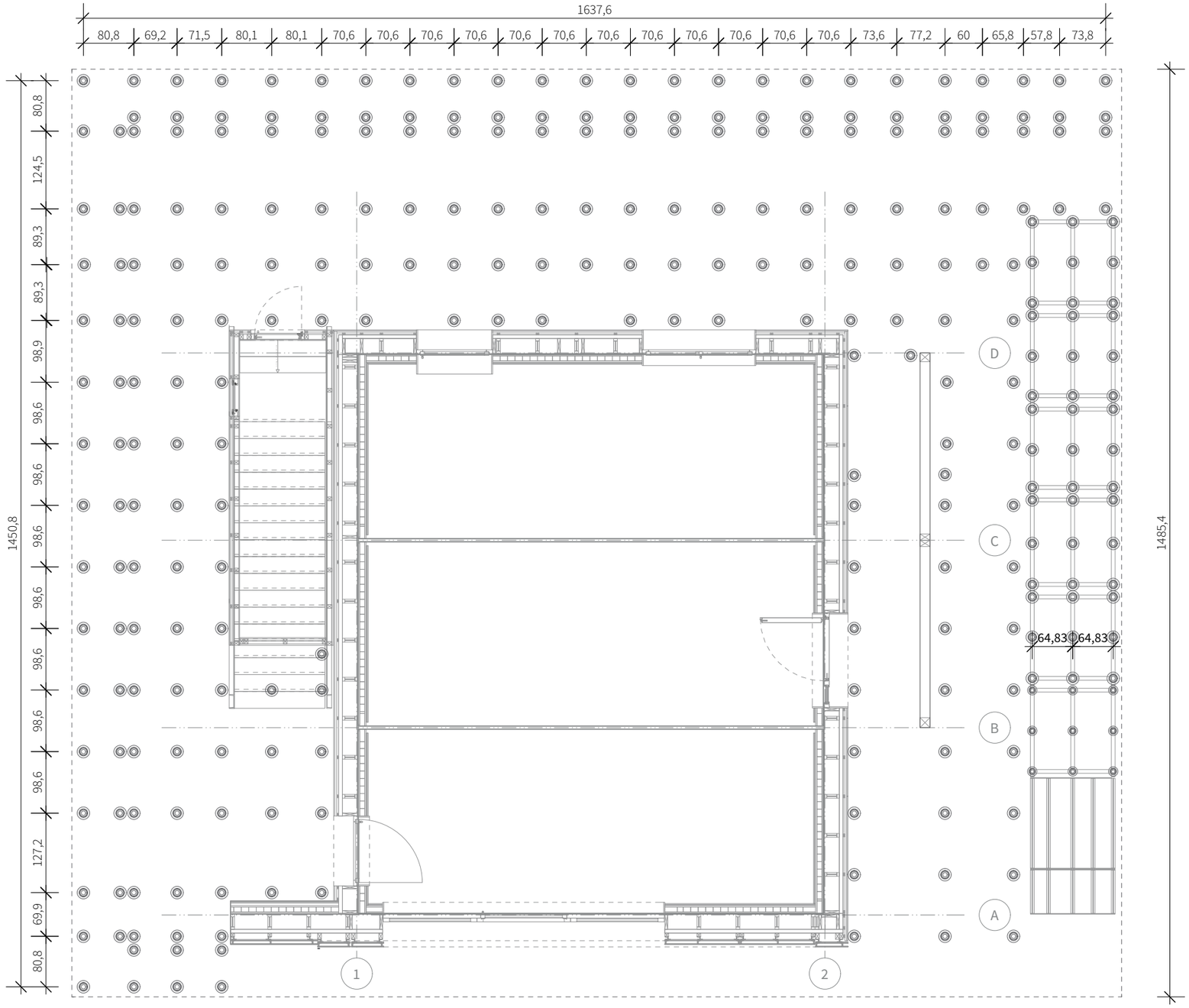

levelup

solar decathlon europe 21

WUPPERTAL GERMANY ...goes urban!

General	GE
Architecture	AR
Interiors	IN
Structural	**ST**
Plumbing	PL
Solar Water Heating	SW
Mechanical	ME
Electrical	EL
Photovoltaic System	PV
Teleco. & Build. Aut. System	BAS
Instrumentation Drawings	ID
Site Operations	SO
Fire Protection	FP
Healthy & Safety	HS
Public Tour	PT

0 0,9 1,9 2,8 3,8

Scale
1:75

Phase
D#6

Drawing Content - HDU
Foundation plan ramp, platform

ST-1002

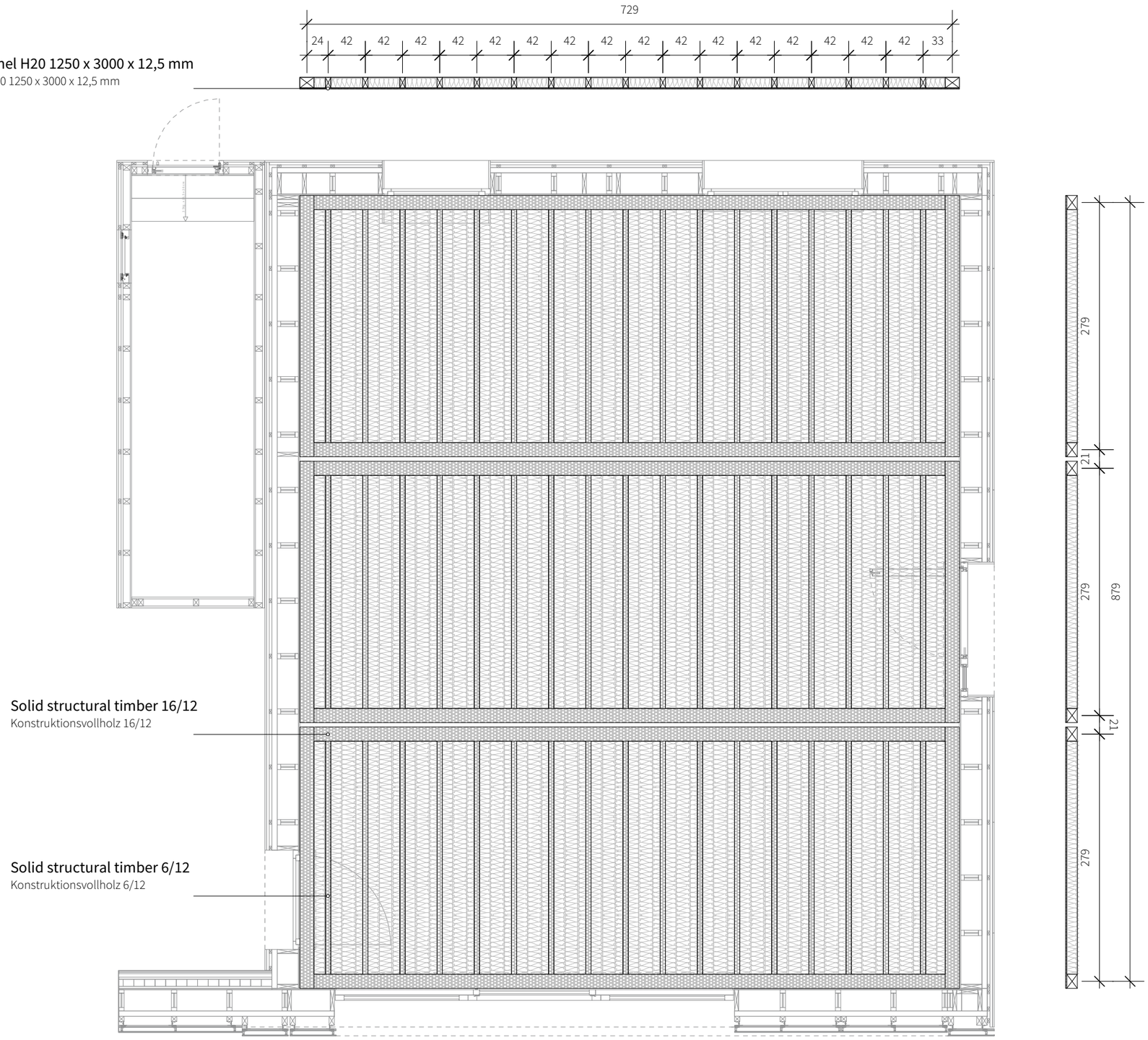

levelup

solar decathlon europe 21
WUPPERTAL GERMANY ...goes urban!

General	GE
Architecture	AR
Interiors	IN
Structural	**ST**
Plumbing	PL
Solar Water Heating	SW
Mechanical	ME
Electrical	EL
Photovoltaic System	PV
Teleco. & Build. Aut. System	BAS
Instrumentation Drawings	ID
Site Operations	SO
Fire Protection	FP
Healthy & Safety	HS
Public Tour	PT

0 0,6 1,3 1,9 2,5

Scale
1:50

Phase
D#6

Drawing Content - HDU
Structural floor plan
Floor elements

ST-1101

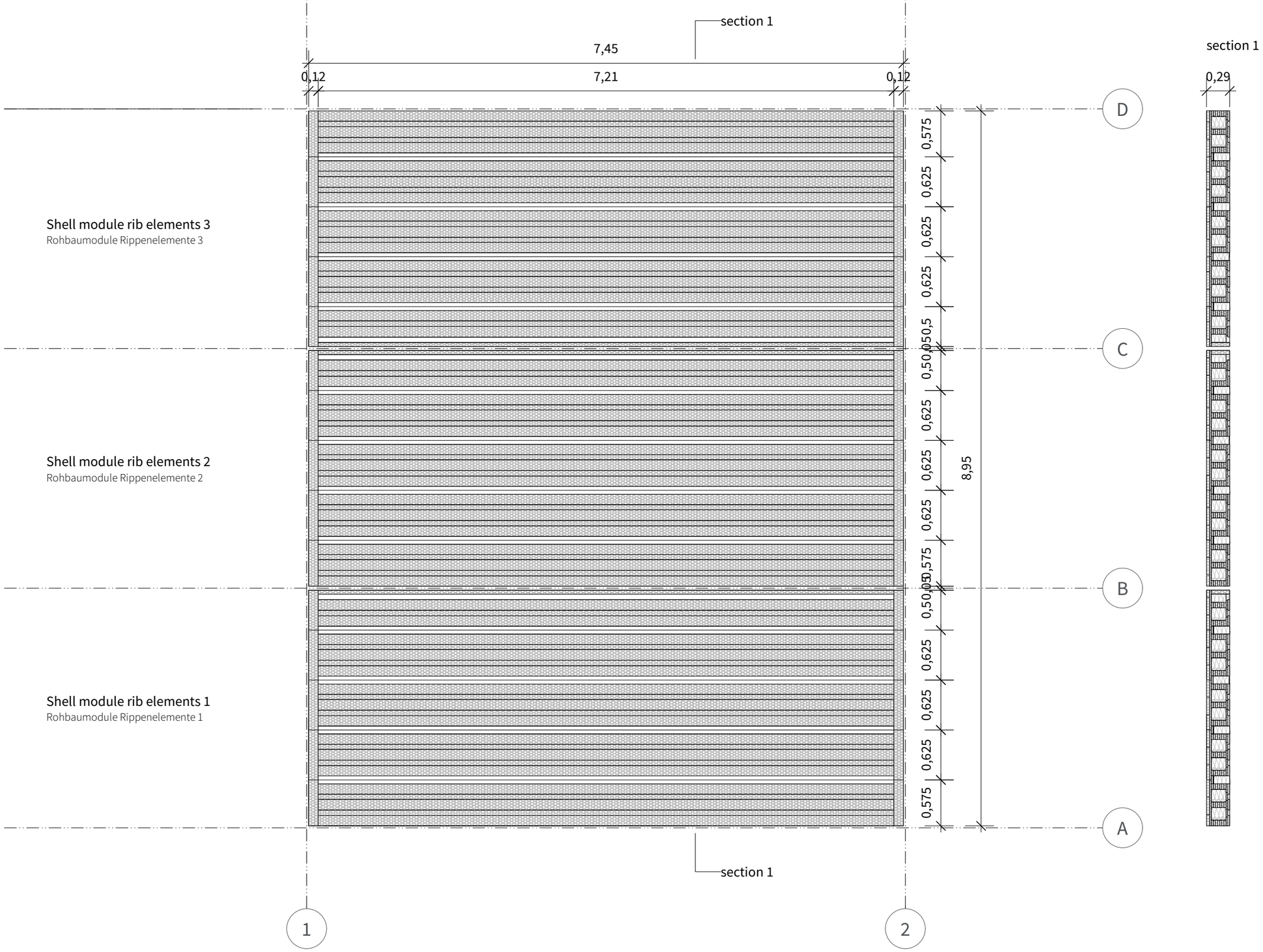

levelup

solar decathlon europe 21
WUPPERTAL GERMANY ...goes urban!

General	GE
Architecture	AR
Interiors	IN
Structural	ST
Plumbing	PL
Solar Water Heating	SW
Mechanical	ME
Electrical	EL
Photovoltaic System	PV
Teleco. & Build. Aut. System	BAS
Instrumentation Drawings	ID
Site Operations	SO
Fire Protection	FP
Healthy & Safety	HS
Public Tour	PT

0 0,6 1,3 1,9 2,5

Scale
1:50

Phase
D#6

Drawing Content - HDU
Structural floor plan floor elements bottom ribs

ST-1102

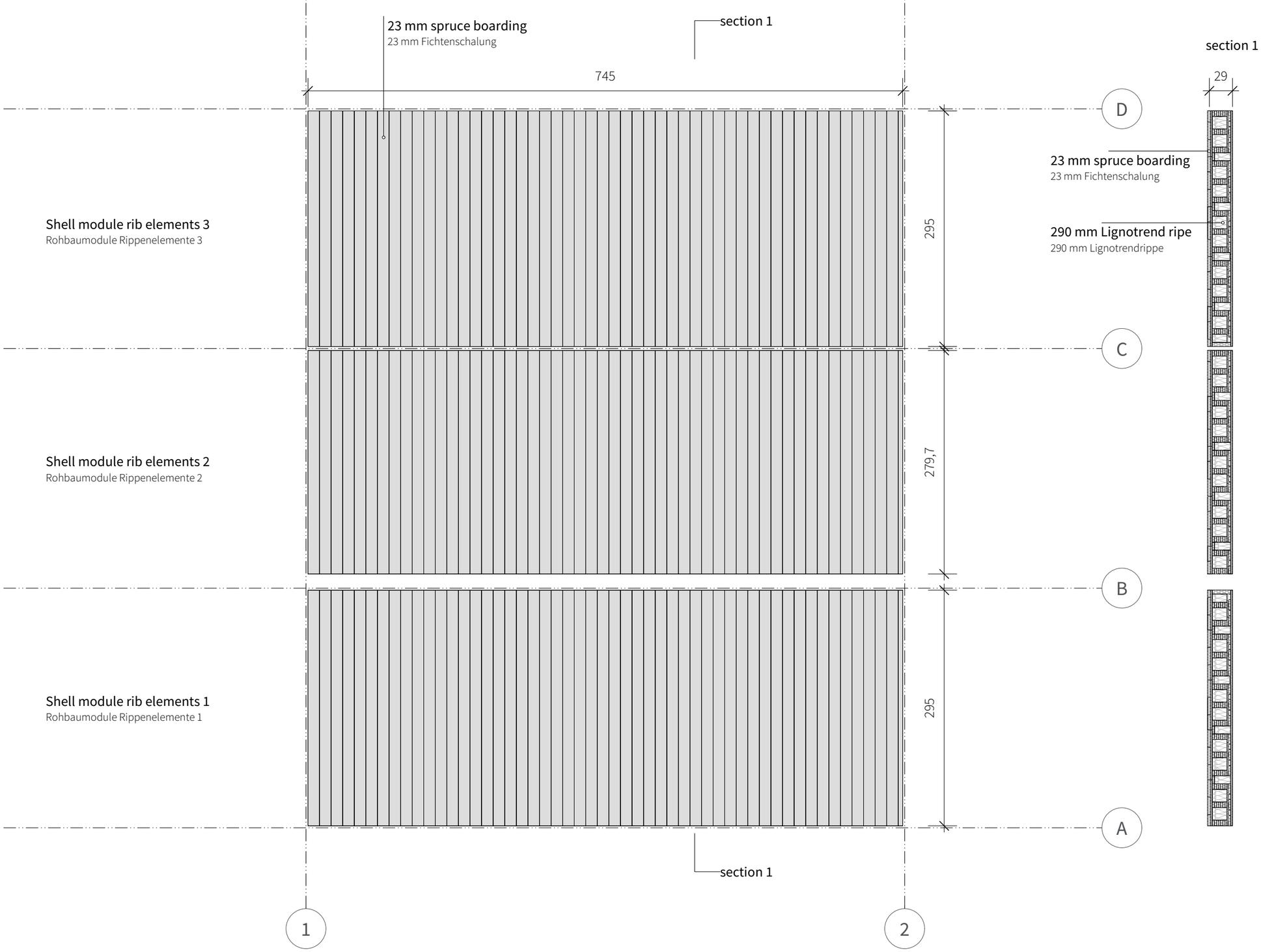

levelup

solar decathlon europe 21
WUPPERTAL GERMANY ...goes urban!

General	GE
Architecture	AR
Interiors	IN
Structural	ST
Plumbing	PL
Solar Water Heating	SW
Mechanical	ME
Electrical	EL
Photovoltaic System	PV
Teleco. & Build. Aut. System	BAS
Instrumentation Drawings	ID
Site Operations	SO
Fire Protection	FP
Healthy & Safety	HS
Public Tour	PT

0 0,6 1,3 1,9 2,5

Scale
1:50

Phase
D#6

Drawing Content - HDU
Structural floor plan
floor Elements ceiling ribs

ST-1103

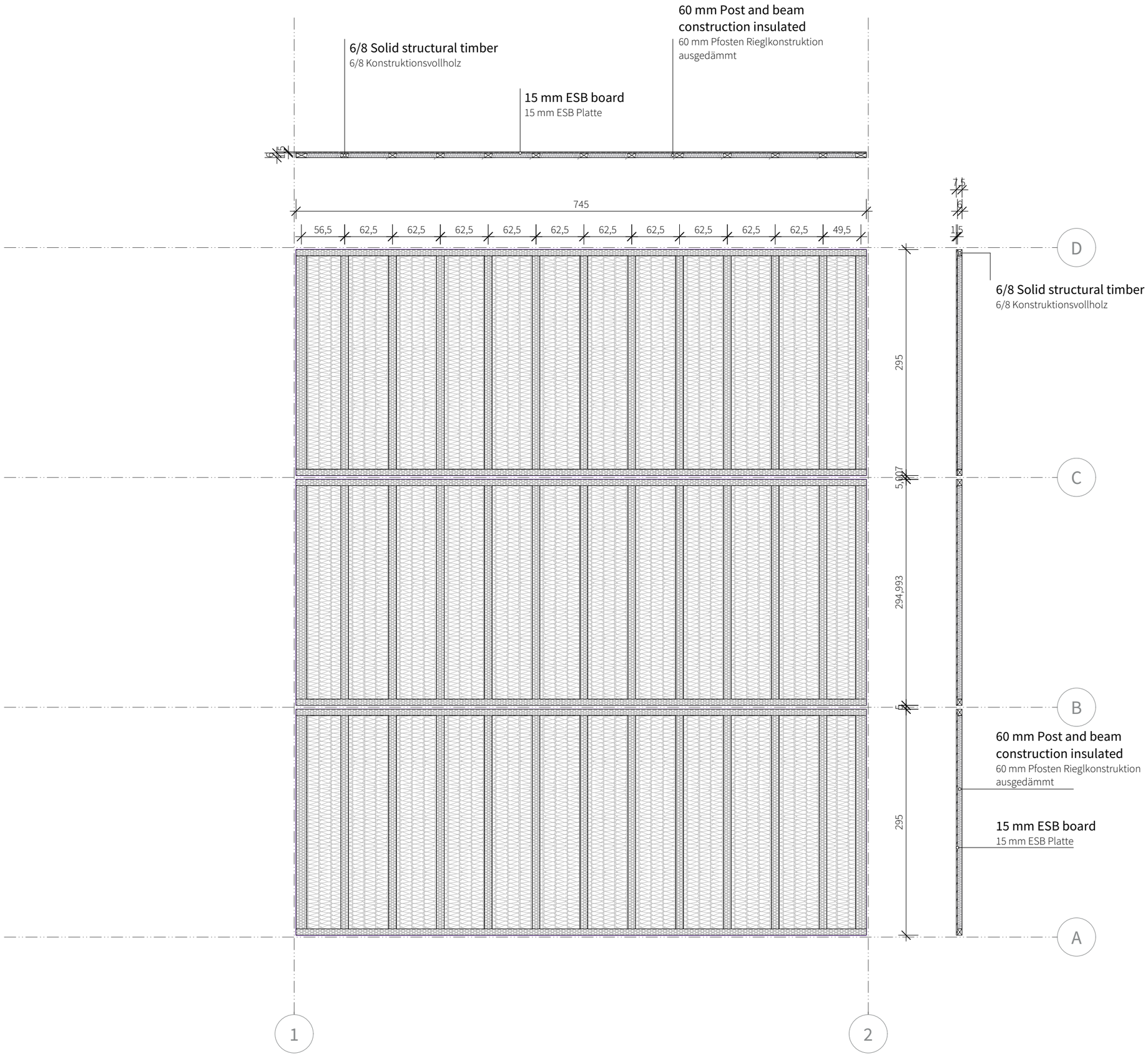

levelup

solar decathlon europe 21

WUPPERTAL GERMANY ...goes urban!

General	GE
Architecture	AR
Interiors	IN
Structural	**ST**
Plumbing	PL
Solar Water Heating	SW
Mechanical	ME
Electrical	EL
Photovoltaic System	PV
Teleco. & Build. Aut. System	BAS
Instrumentation Drawings	ID
Site Operations	SO
Fire Protection	FP
Healthy & Safety	HS
Public Tour	PT

0 0,6 1,3 1,9 2,5

Scale
1:50

Phase
D#6

Drawing Content - HDU
Structural floor plan framework ceiling

ST-1104

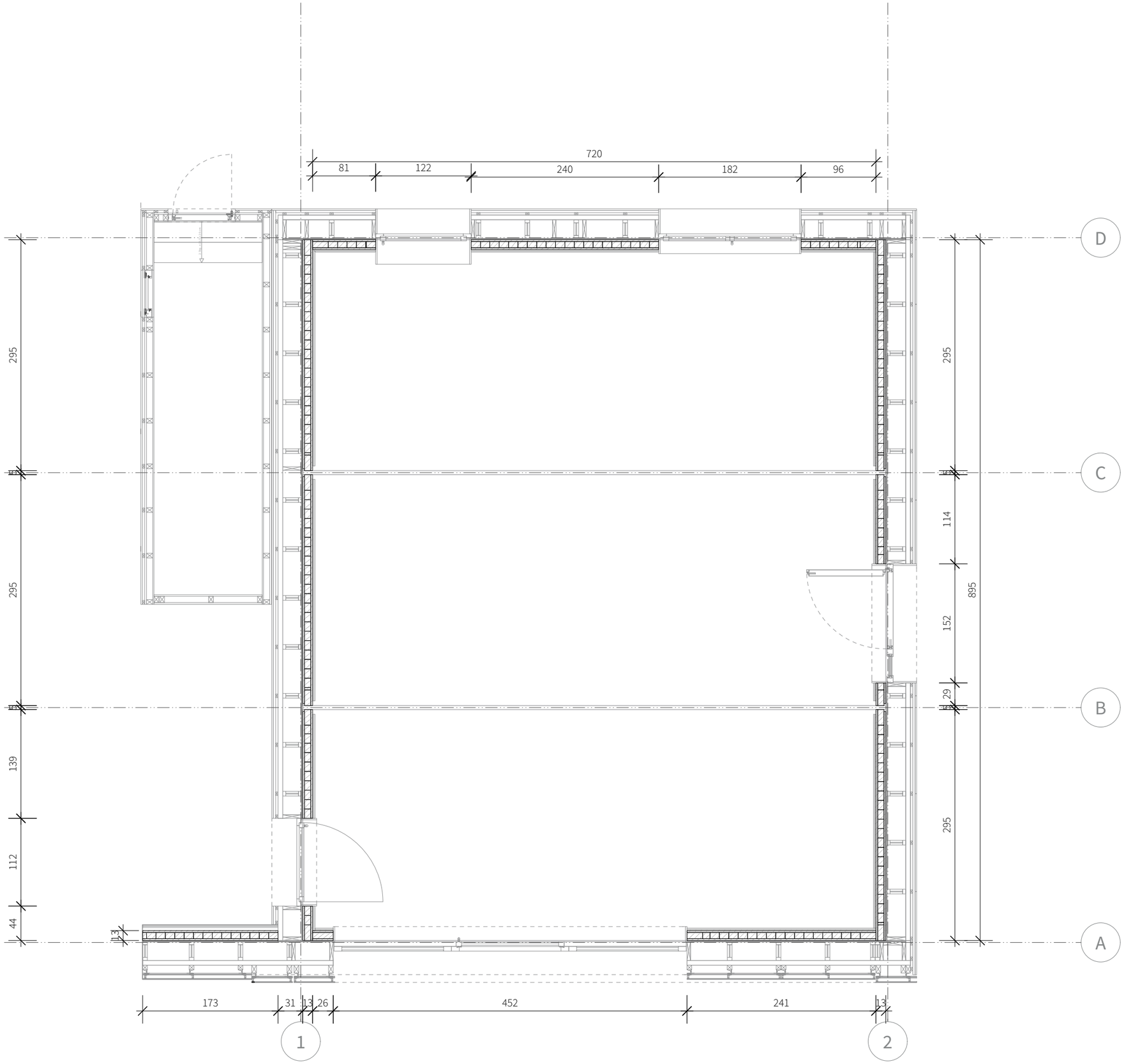

levelup

solar decathlon europe 21

WUPPERTAL GERMANY ...goes urban!

General	GE
Architecture	AR
Interiors	IN
Structural	**ST**
Plumbing	PL
Solar Water Heating	SW
Mechanical	ME
Electrical	EL
Photovoltaic System	PV
Teleco. & Build. Aut. System	BAS
Instrumentation Drawings	ID
Site Operations	SO
Fire Protection	FP
Healthy & Safety	HS
Public Tour	PT

0 0,6 1,3 1,9 2,5

Scale
1:100

Phase
D#6

Drawing Content - HDU
Structural floor plan
Wood module wall

ST-1105

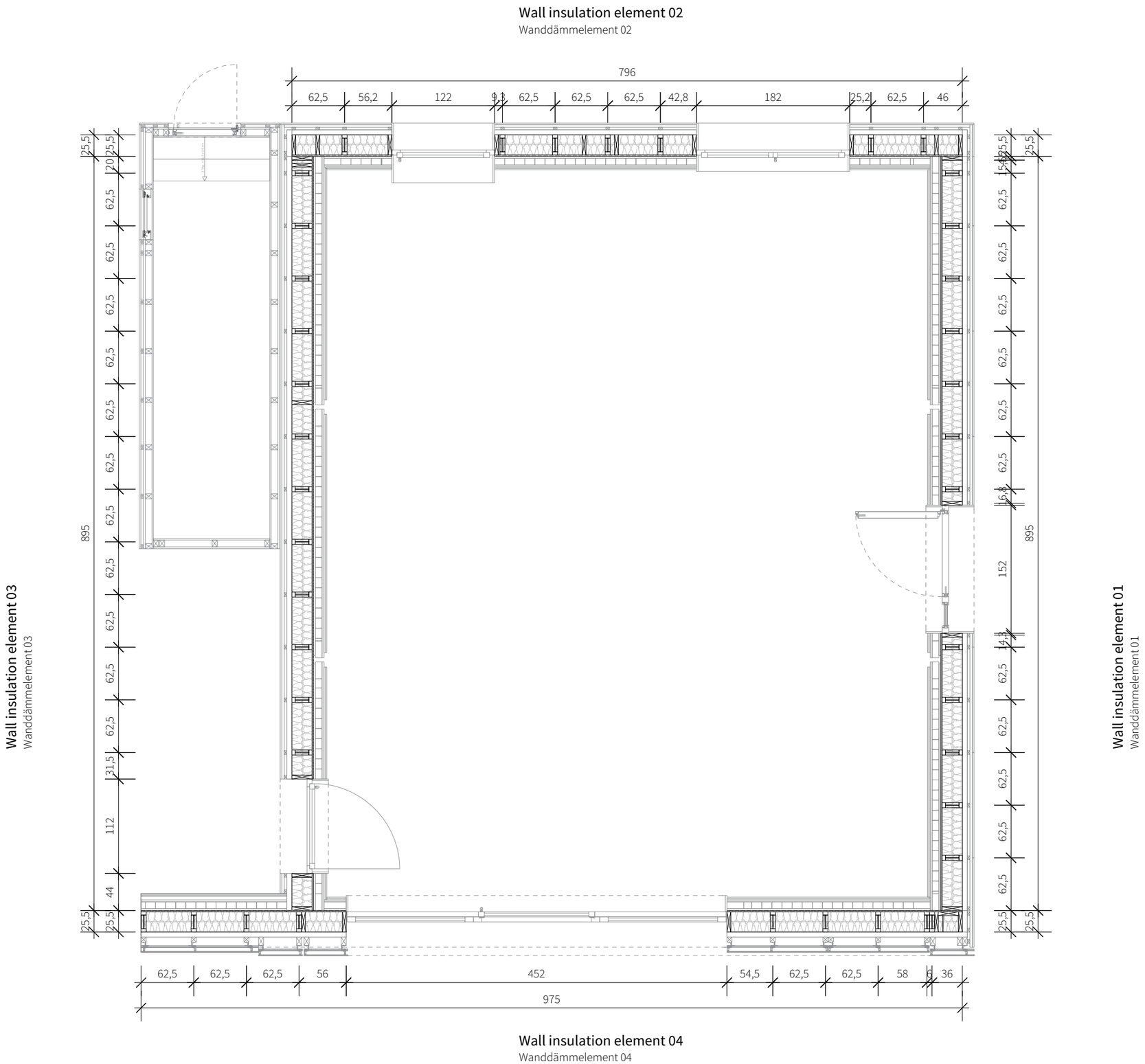

levelup

solar decathlon europe 21

WUPPERTAL GERMANY ...goes urban!

General	GE
Architecture	AR
Interiors	IN
Structural	ST
Plumbing	PL
Solar Water Heating	SW
Mechanical	ME
Electrical	EL
Photovoltaic System	PV
Teleco. & Build. Aut. System	BAS
Instrumentation Drawings	ID
Site Operations	SO
Fire Protection	FP
Healthy & Safety	HS
Public Tour	PT

0 0,6 1,3 1,9 2,5

Scale
1:50

Phase
D#6

Drawing Content - HDU
Structural floor plan
Wall elements Insulation panels

ST-1106

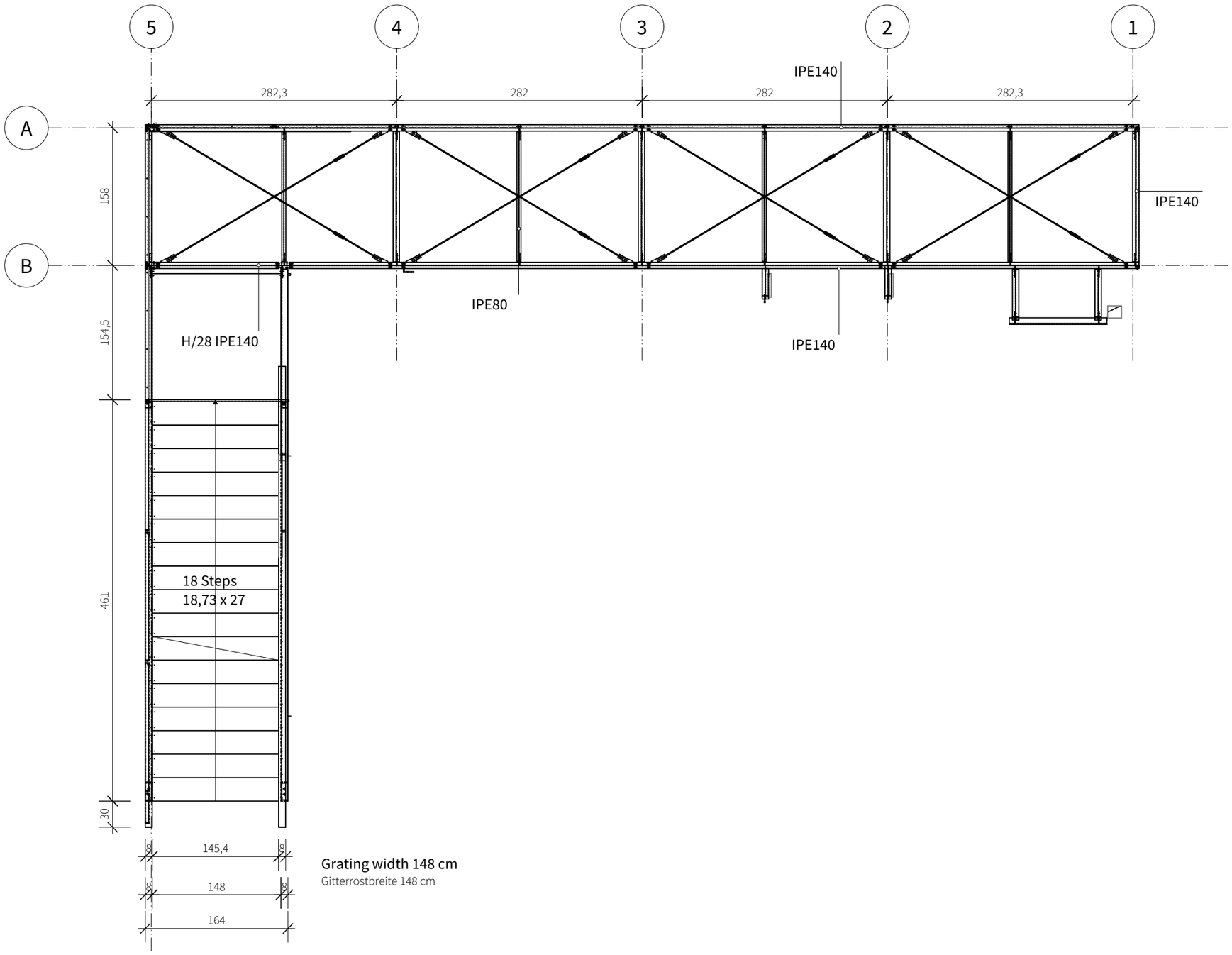

levelup

solar decathlon europe 21
WUPPERTAL GERMANY ...goes urban!

General	GE
Architecture	AR
Interiors	IN
Structural	ST
Plumbing	PL
Solar Water Heating	SW
Mechanical	ME
Electrical	EL
Photovoltaic System	PV
Teleco. & Build. Aut. System	BAS
Instrumentation Drawings	ID
Site Operations	SO
Fire Protection	FP
Healthy & Safety	HS
Public Tour	PT

0 0,6 1,3 1,9 2,5

Scale
1:50

Phase
D#6

Drawing Content - HDU
structural floor plan
Steel staircase and walkway

ST-1107

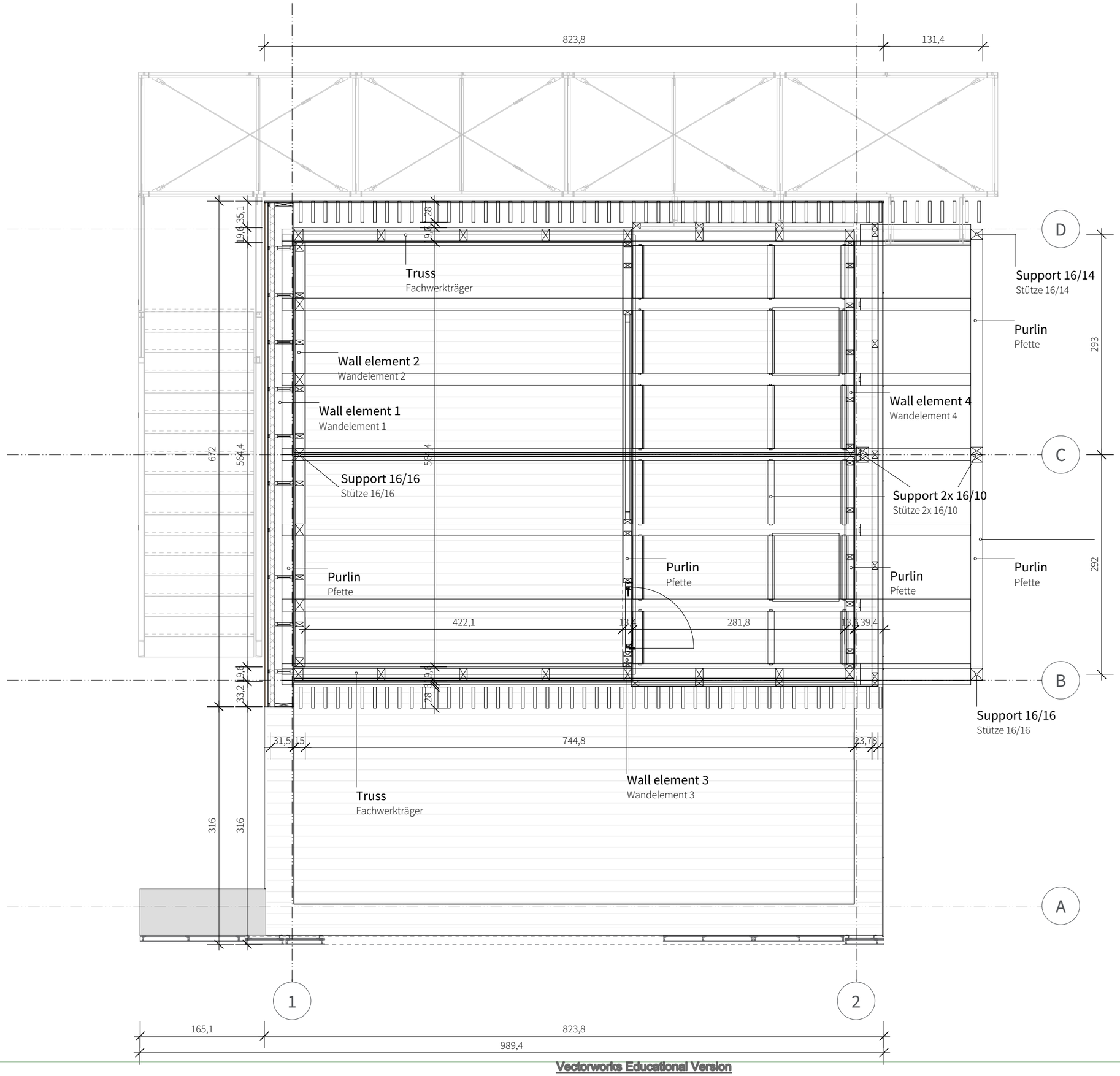

levelup

solar decathlon europe 21

WUPPERTAL GERMANY ...goes urban!

General	GE
Architecture	AR
Interiors	IN
Structural	**ST**
Plumbing	PL
Solar Water Heating	SW
Mechanical	ME
Electrical	EL
Photovoltaic System	PV
Teleco. & Build. Aut. System	BAS
Instrumentation Drawings	ID
Site Operations	SO
Fire Protection	FP
Healthy & Safety	HS
Public Tour	PT

0 0,6 1,3 1,9 2,5

Scale
1:50

Phase
D#6

Drawing Content - HDU
Structural roof plan

ST-1201

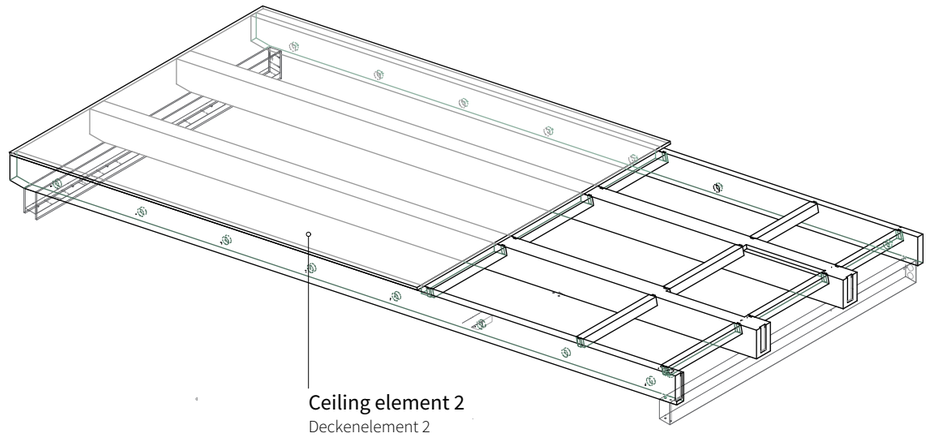

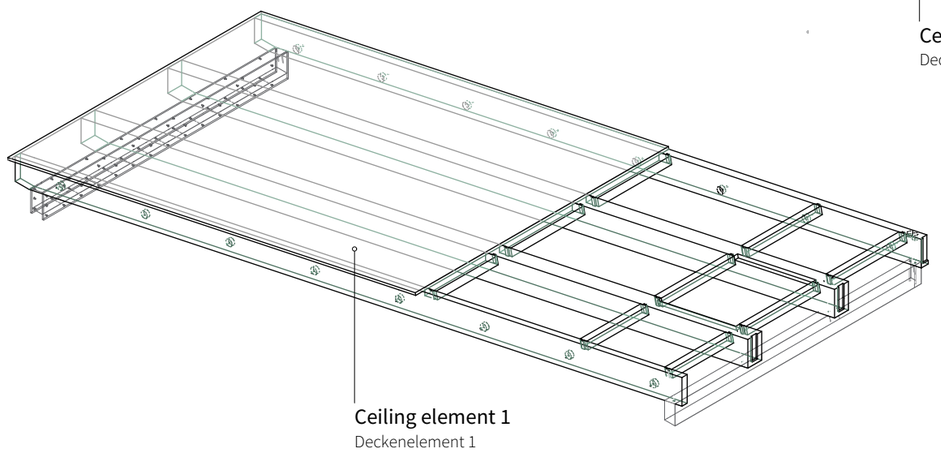

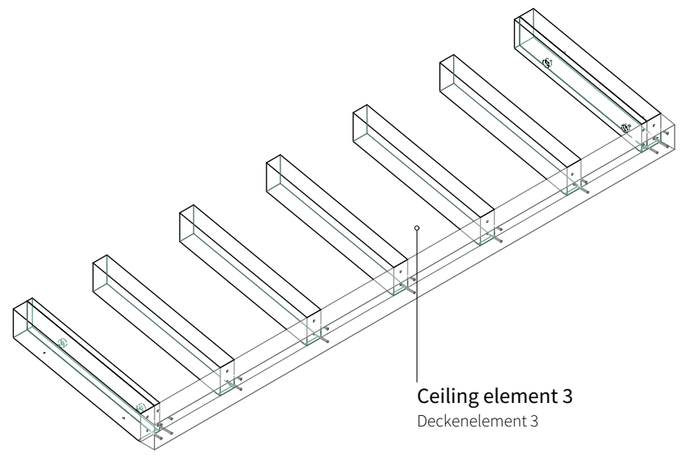

Floor plan 1:200
Grundriss Obergeschoss 1:200

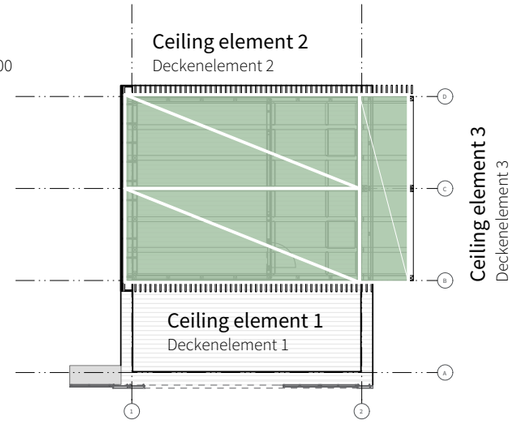

levelup

solar decathlon europe 21
WUPPERTAL GERMANY ...goes urban!

General	GE
Architecture	AR
Interiors	IN
Structural	**ST**
Plumbing	PL
Solar Water Heating	SW
Mechanical	ME
Electrical	EL
Photovoltaic System	PV
Teleco. & Build. Aut. System	BAS
Instrumentation Drawings	ID
Site Operations	SO
Fire Protection	FP
Healthy & Safety	HS
Public Tour	PT

0 0,6 1,3 1,9 2,5

Scale
1:50

Phase
D#6

Drawing Content - HDU
Structural roof plan
Roof elements

ST-1202

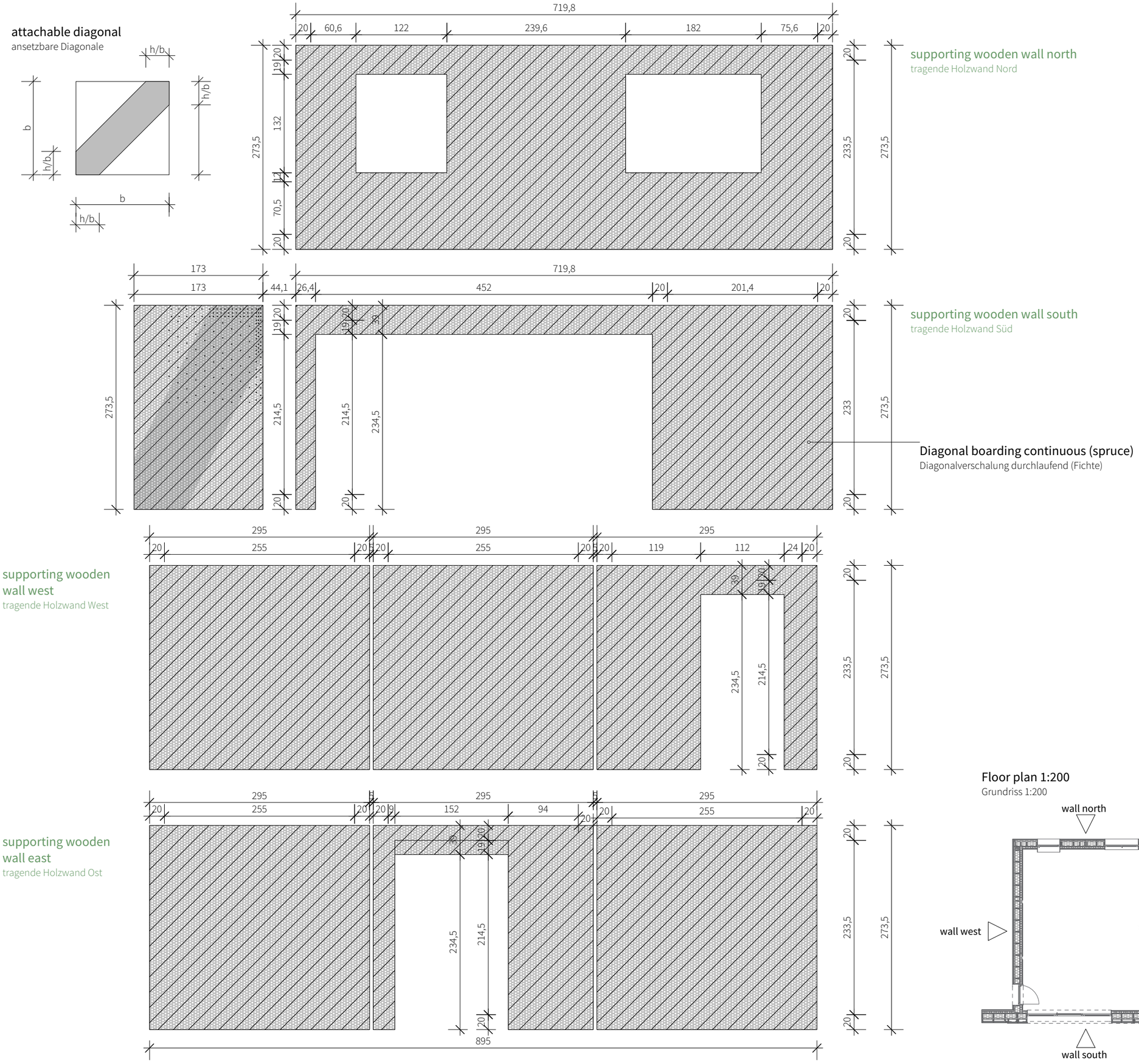

Floor plan 1:200
Grundriss 1:200

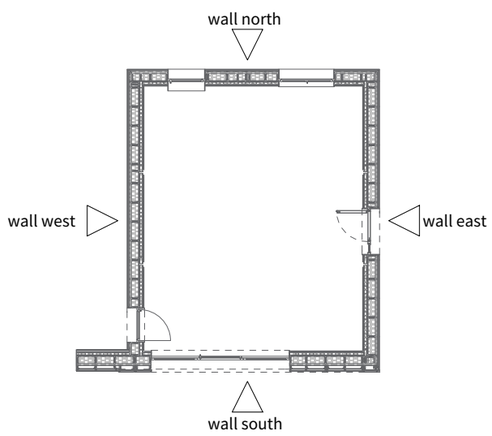

levelup

solar decathlon europe 21
WUPPERTAL GERMANY ...goes urban!

General	GE
Architecture	AR
Interiors	IN
Structural	**ST**
Plumbing	PL
Solar Water Heating	SW
Mechanical	ME
Electrical	EL
Photovoltaic System	PV
Teleco. & Build. Aut. System	BAS
Instrumentation Drawings	ID
Site Operations	SO
Fire Protection	FP
Healthy & Safety	HS
Public Tour	PT

0 0,6 1,3 1,9 2,5

Scale
1:50

Phase
D#6

Drawing Content - HDU
Structural Sections supporting wooden wall

ST-1301

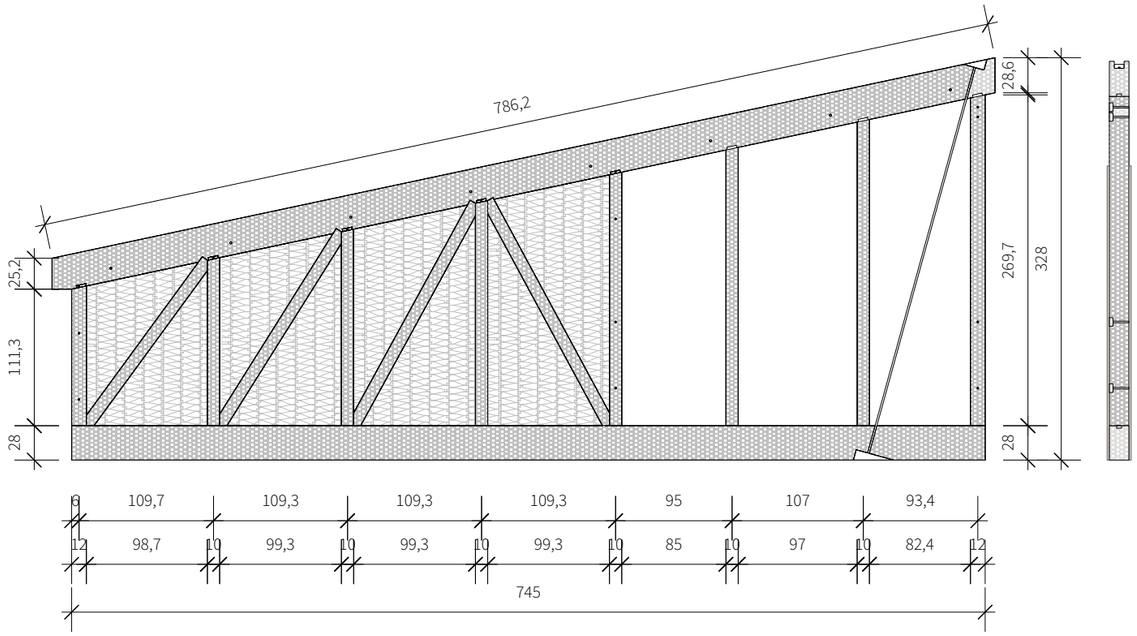

Section truss
Schnitt Fachwerkträger

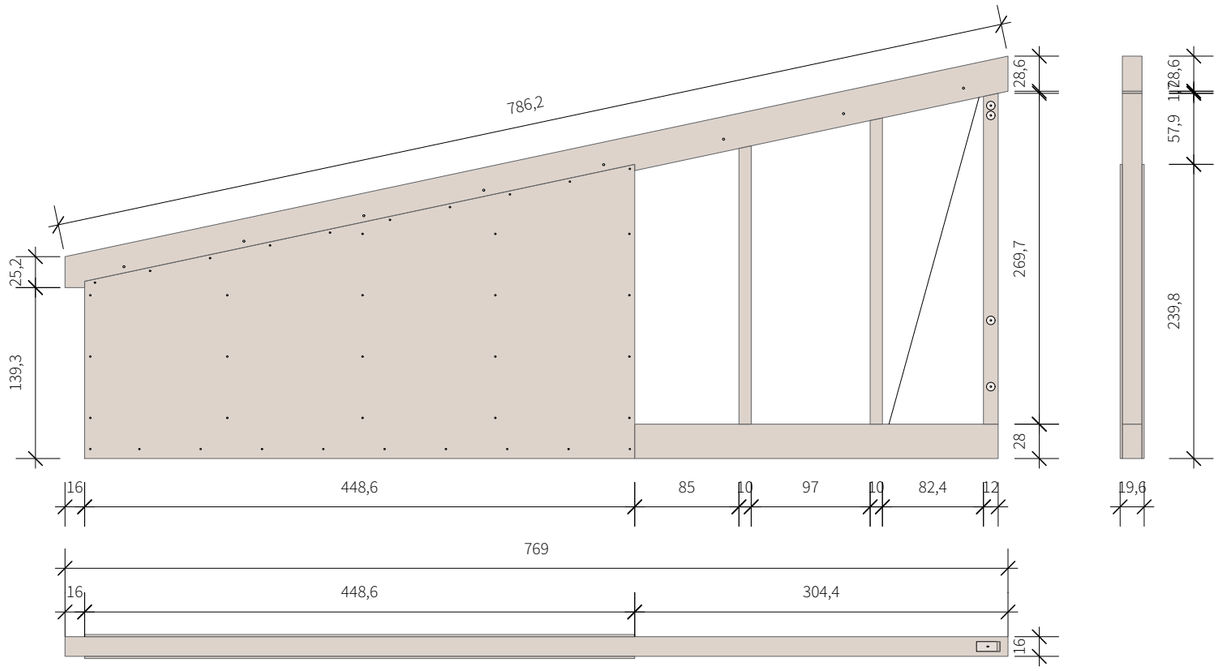

View truss
Ansicht Fachwerkträger

Overview 1:200
Übersicht 1:200

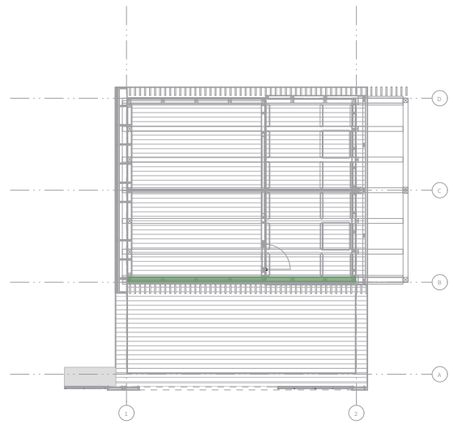

levelup

solar decathlon europe 21
WUPPERTAL GERMANY ...goes urban!

0 0,6 1,3 1,9 2,5

Scale
1:100

Phase
D#6

Drawing Content - HDU
Structural section truss 01

ST-1302

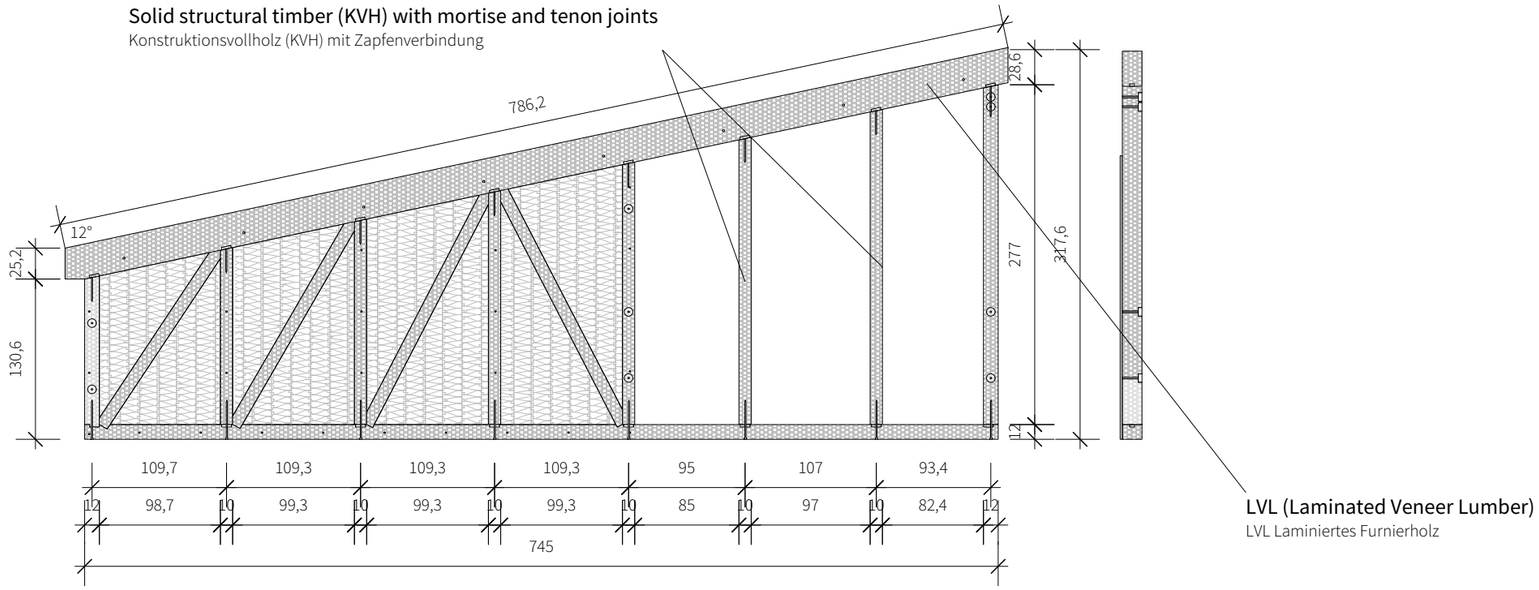

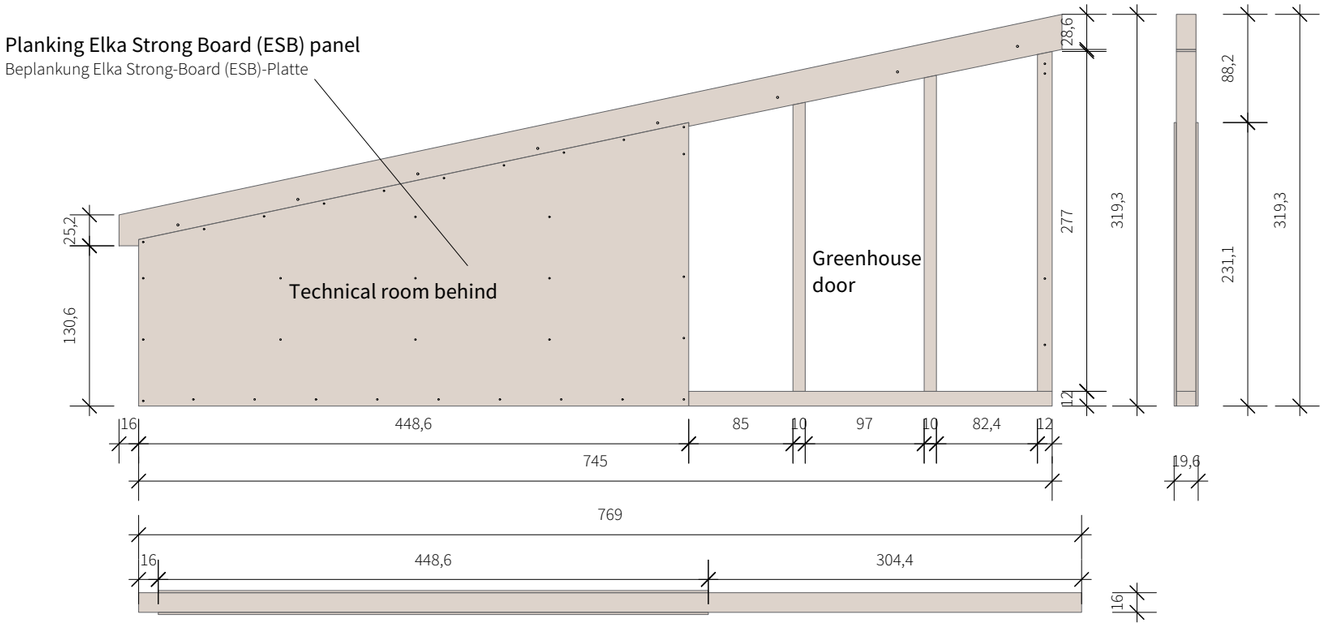

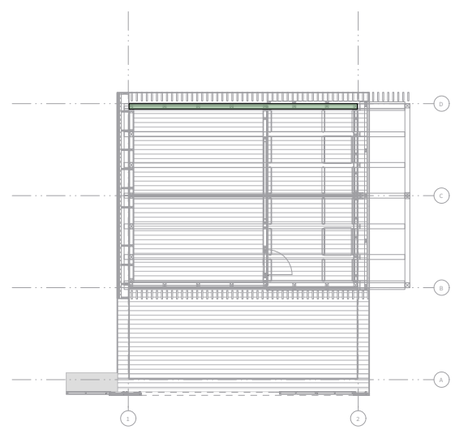

levelup

solar decathlon europe 21
WUPPERTAL GERMANY ...goes urban!

General	GE
Architecture	AR
Interiors	IN
Structural	ST
Plumbing	PL
Solar Water Heating	SW
Mechanical	ME
Electrical	EL
Photovoltaic System	PV
Teleco. & Build. Aut. System	BAS
Instrumentation Drawings	ID
Site Operations	SO
Fire Protection	FP
Healthy & Safety	HS
Public Tour	PT

0 0,6 1,3 1,9 2,5

Scale
1:50

Phase
D#6

Drawing Content - HDU
Structural section truss 02

ST-1303

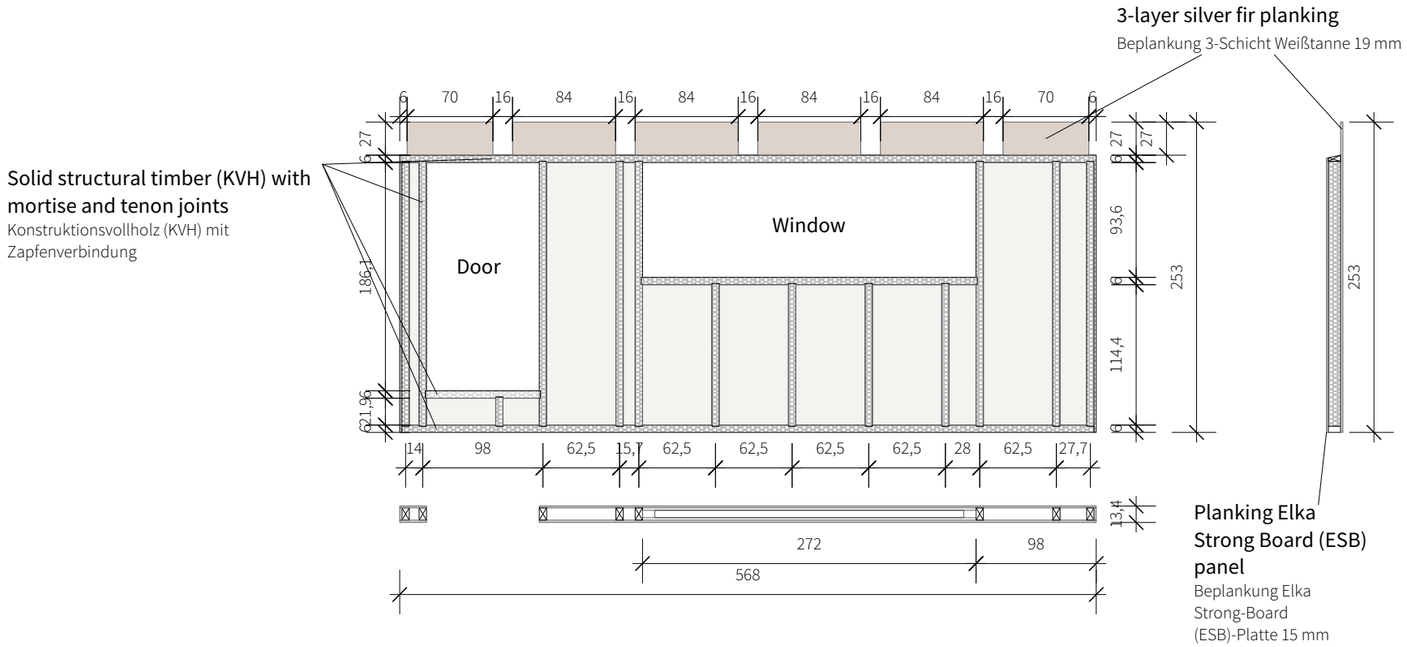

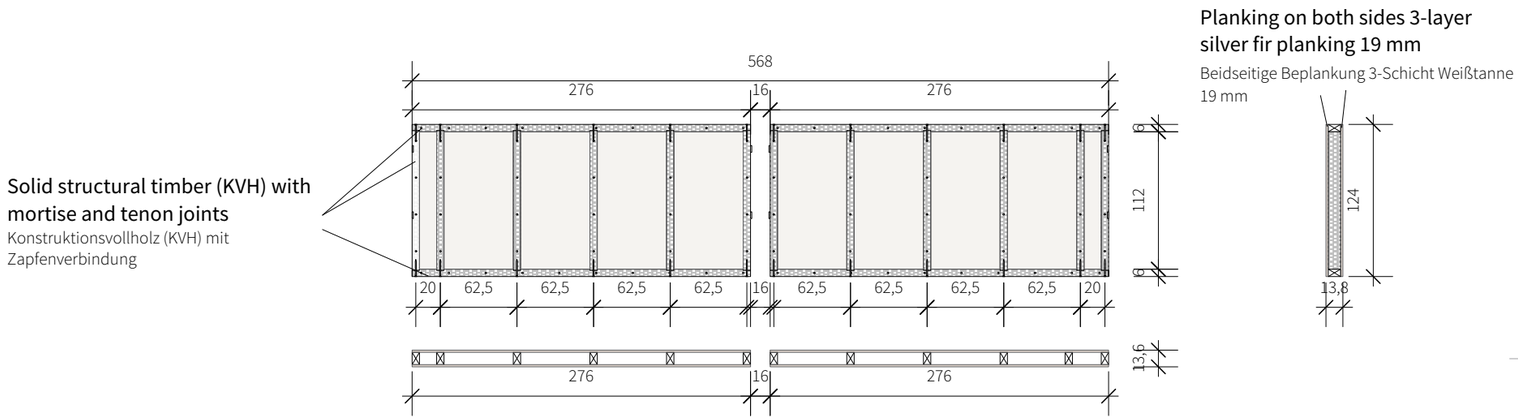

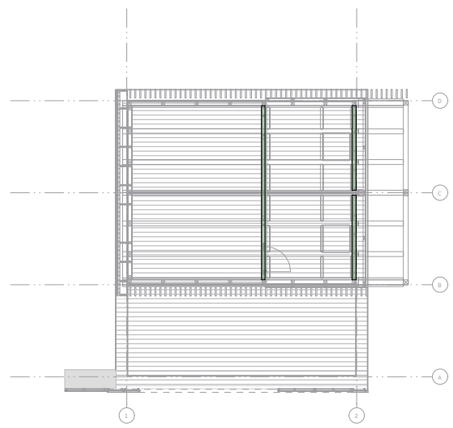

levelup

solar decathlon europe 21
WUPPERTAL GERMANY ...goes urban!

General	GE
Architecture	AR
Interiors	IN
Structural	ST
Plumbing	PL
Solar Water Heating	SW
Mechanical	ME
Electrical	EL
Photovoltaic System	PV
Teleco. & Build. Aut. System	BAS
Instrumentation Drawings	ID
Site Operations	SO
Fire Protection	FP
Healthy & Safety	HS
Public Tour	PT

0 0,6 1,3 1,9 2,5

Scale
1:50

Phase
D#6

Drawing Content - HDU
Structural Section
Wall elements upper floor

ST-1304

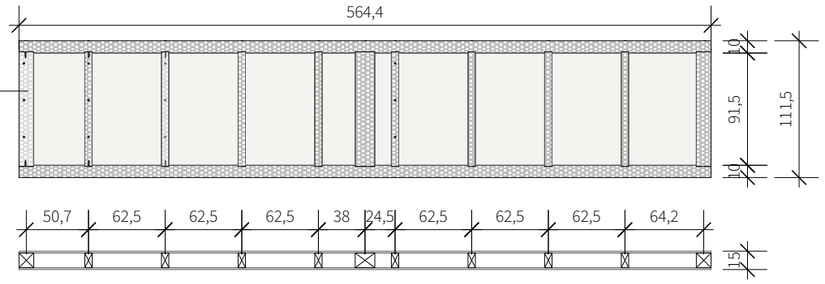

Solid structural timber (KVH) with mortise and tenon joints
Konstruktionsvollholz (KVH) mit Zapfenverbindung

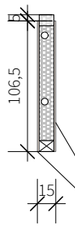

Planking Elka Strong Board (ESB) panel
Beplankung Elka Strong-Board (ESB)-Platte 15 mm

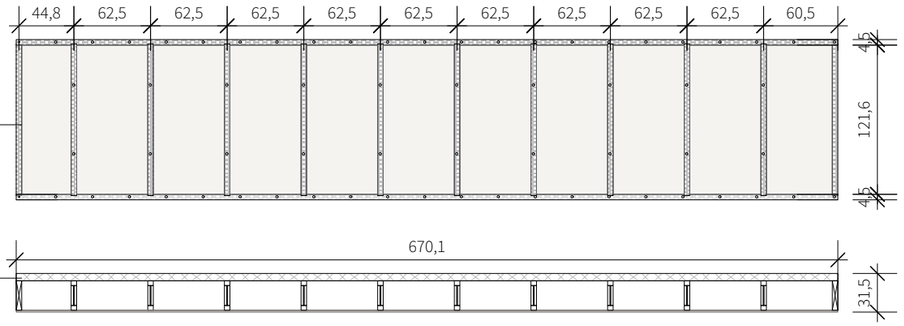

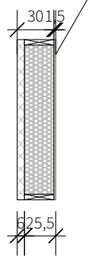

Solid structural timber (KVH) with mortise and tenon joints
Konstruktionsvollholz (KVH) mit Zapfenverbindung

60 mm wood fibre insulation board STEICOprotect H dry
60 mm Holzfaserdäammplatte STEICOprotect H dry

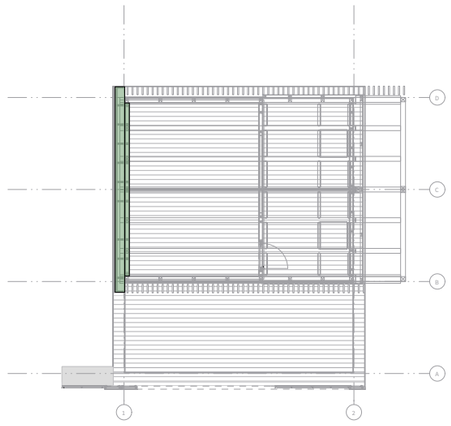

levelup

solar decathlon europe 21
WUPPERTAL GERMANY ...goes urban!

General	GE
Architecture	AR
Interiors	IN
Structural	ST
Plumbing	PL
Solar Water Heating	SW
Mechanical	ME
Electrical	EL
Photovoltaic System	PV
Teleco. & Build. Aut. System	BAS
Instrumentation Drawings	ID
Site Operations	SO
Fire Protection	FP
Healthy & Safety	HS
Public Tour	PT

0 0,6 1,3 1,9 2,5

Scale
1:50

Phase
D#6

Drawing Content - HDU
Structural sections
Wall elements 1.1 and 1.2
Upper floor

ST-1305

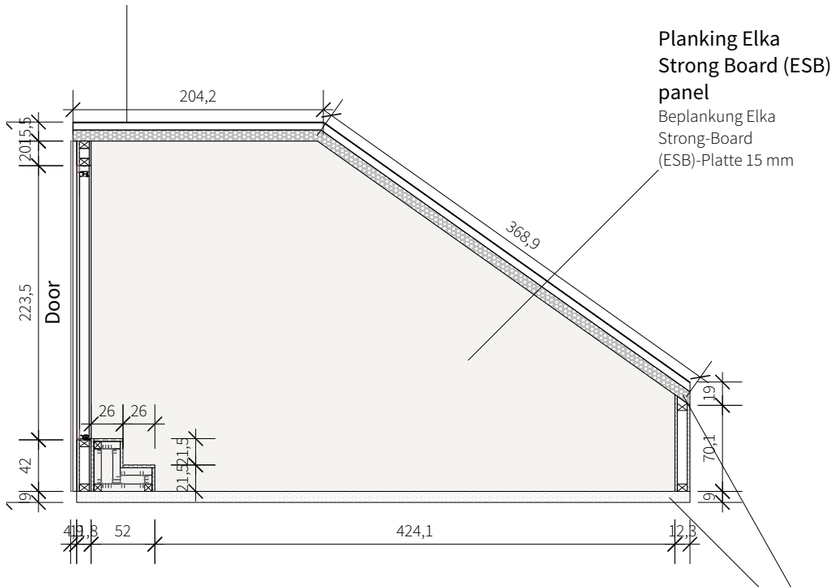

Planking Elka Strong Board (ESB) panel
Beplankung Elka Strong-Board (ESB)-Platte 15 mm

Solid structural timber (KVH) with mortise and tenon joints
Konstruktionsvollholz (KVH) mit Zapfenverbindung

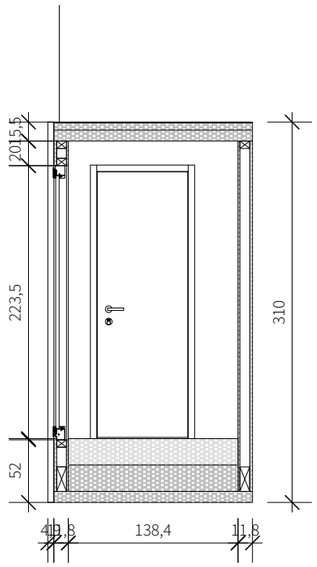

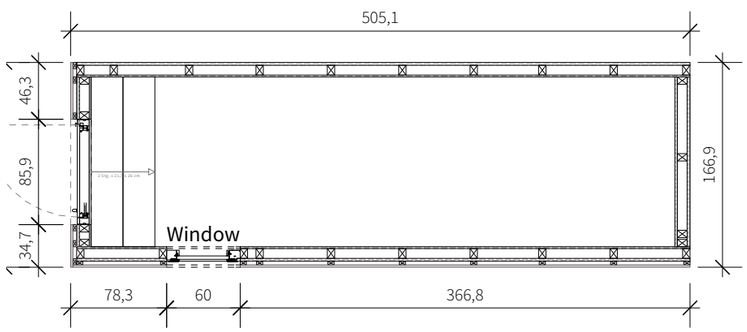

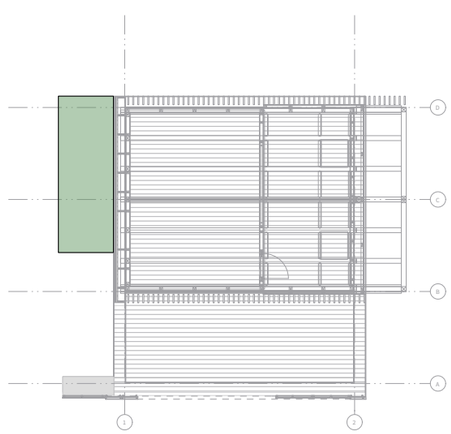

levelup

solar decathlon europe 21
WUPPERTAL GERMANY ...goes urban!

General	GE
Architecture	AR
Interiors	IN
Structural	**ST**
Plumbing	PL
Solar Water Heating	SW
Mechanical	ME
Electrical	EL
Photovoltaic System	PV
Teleco. & Build. Aut. System	BAS
Instrumentation Drawings	ID
Site Operations	SO
Fire Protection	FP
Healthy & Safety	HS
Public Tour	PT

0 0,6 1,3 1,9 2,5

Scale
1:50

Phase
D#6

Drawing Content - HDU
Structural section
Technology module

ST-1306

Plumbing (PL)

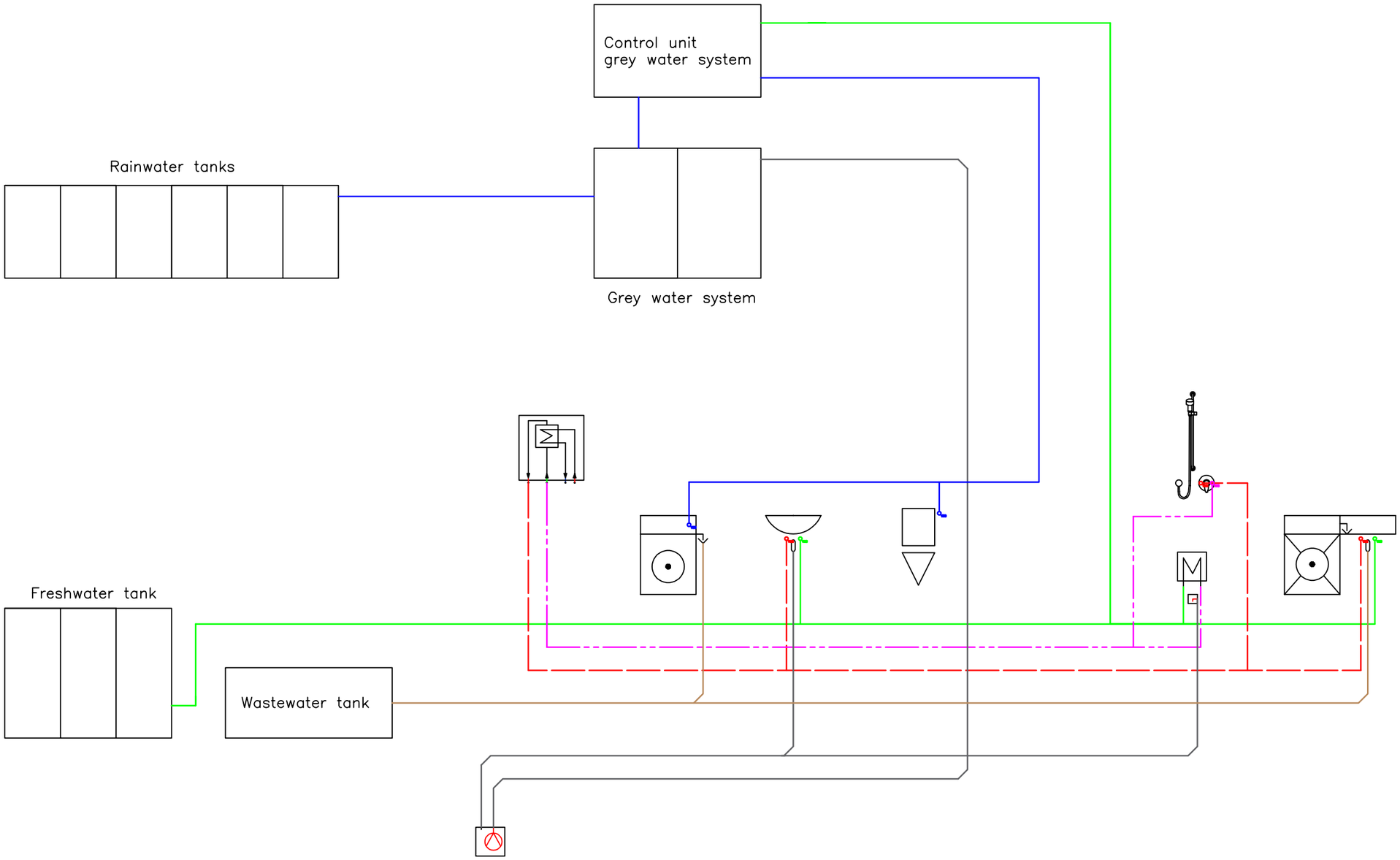

Legend:

- Potable water hot
- Potable water cold
- Potable water cold pre-heated
- Process water
- Waste water
- Grey water
- Shower
- Shower channel heat exchanger
- Lifting pump
- Washbasin
- Toilet
- Kitchen unit
- Washing machine
- Heat exchanger

levelup

solar decathlon europe 21»22
WUPPERTAL GERMANY

Scale

Phase
D#6

Drawing Content
Conceptual Drawings

PL-0001

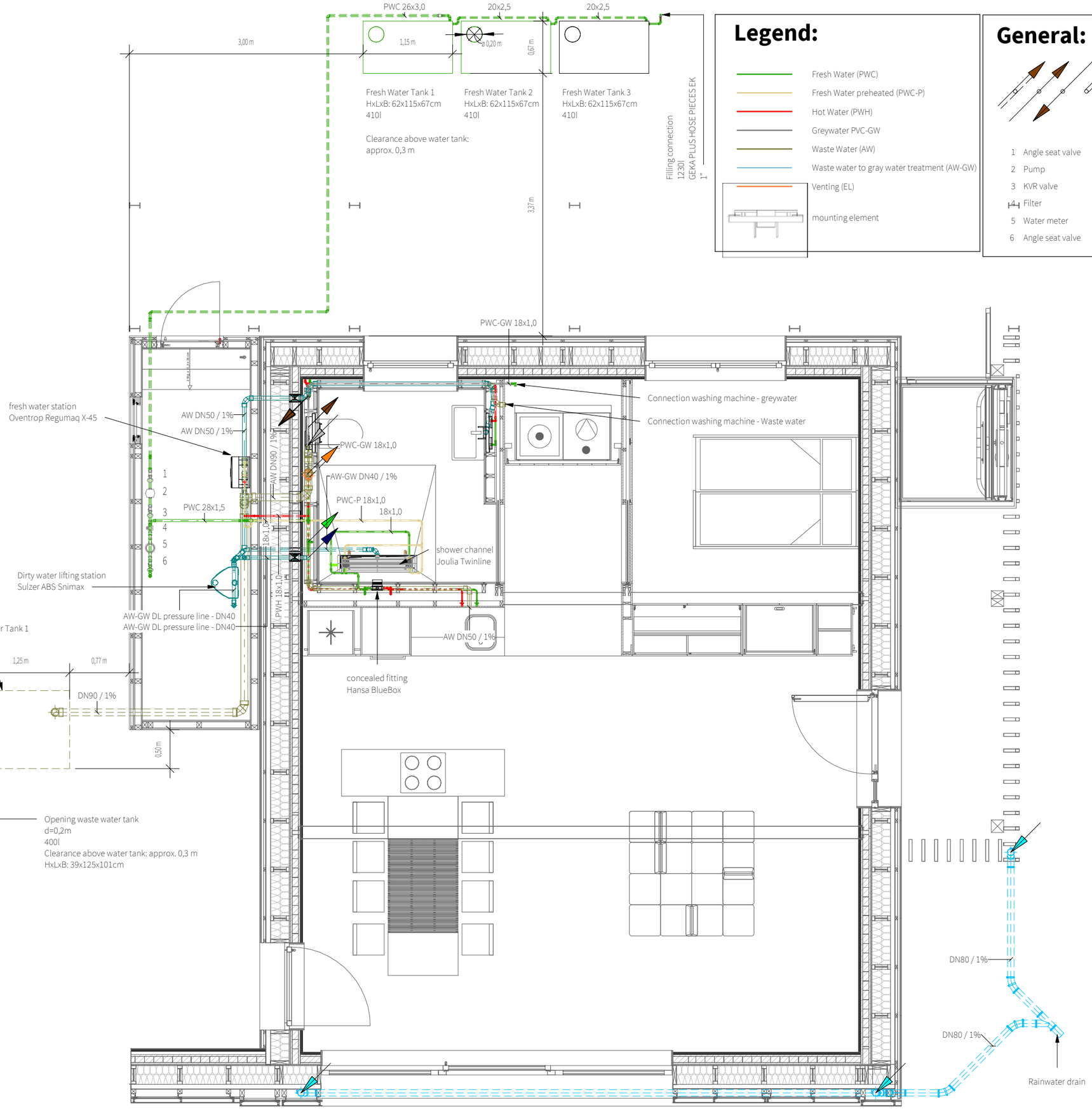

Legend:

- Fresh Water (PWC)
- Fresh Water preheated (PWC-P)
- Hot Water (PWH)
- Greywater PVC-GW
- Waste Water (AW)
- Waste water to gray water treatment (AW-GW)
- Venting (EL)
- mounting element

General:

Strand direction arrows

1 Angle seat valve
2 Pump
3 KVR valve
4 Filter
5 Water meter
6 Angle seat valve

levelup

solar decathlon 21-22 europe
WUPPERTAL GERMANY

Scale
1 : 50

Phase
D#6

Drawing Content
Sanitary Overview - Level 01

PL-1001

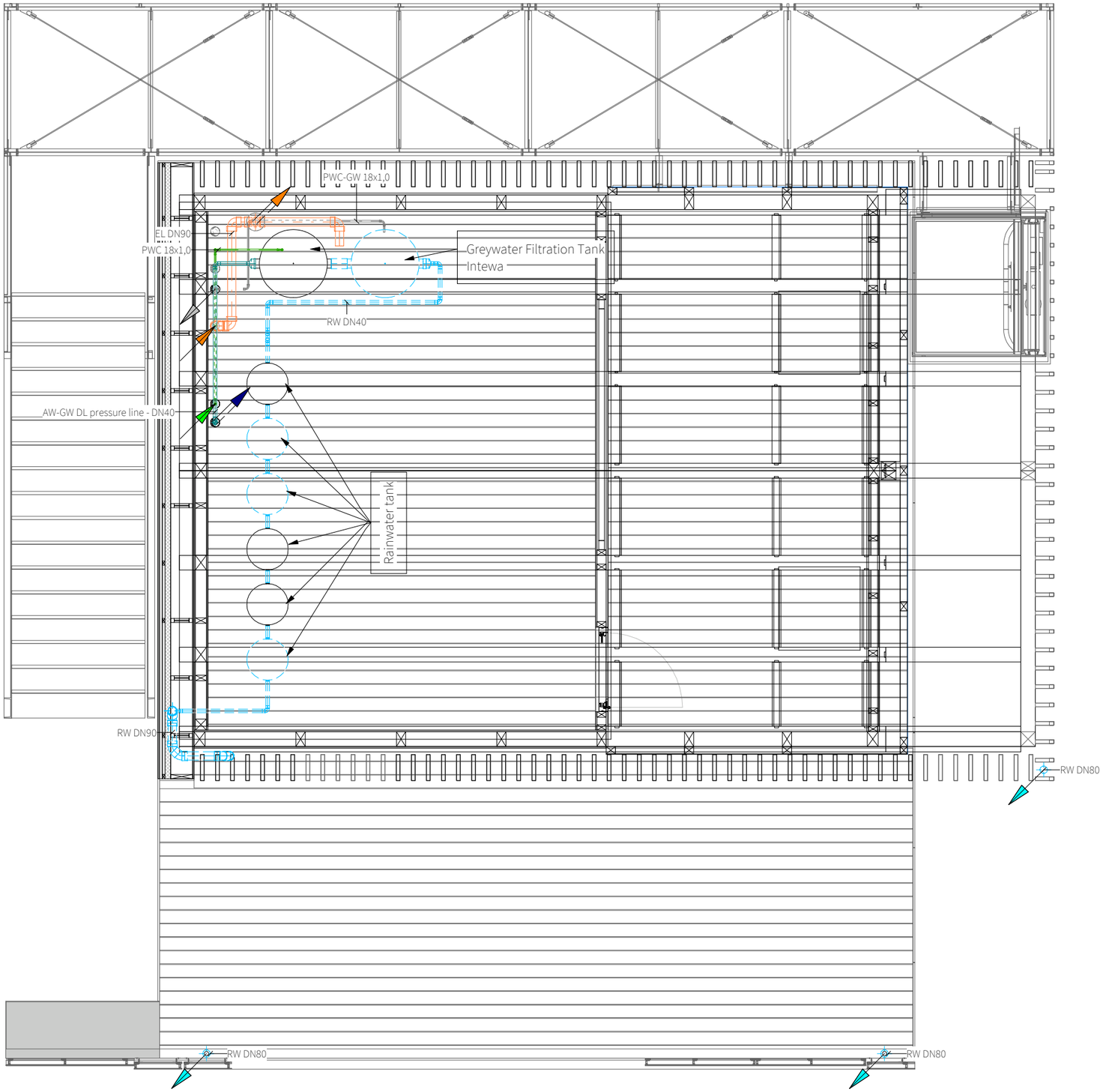

General:

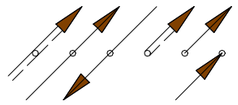

Strand direction arrows

1 Angle seat valve
2 Pump
3 KVR valve
4 Filter
5 Water meter
6 Angle seat valve

Legend:

- Fresh Water (PWC)
- Fresh Water preheated (PWC-P)
- Hot Water (PWH)
- Greywater PVC-GW
- Waste Water (AW)
- Waste water to gray water treatment (AW-GW)
- Venting (EL)
- mounting element

levelup

solar decathlon 21-22 europe
WUPPERTAL GERMANY

Scale
1 : 50

Phase
D#6

Drawing Content
Sanitary Overview - Level 02

PL-1002

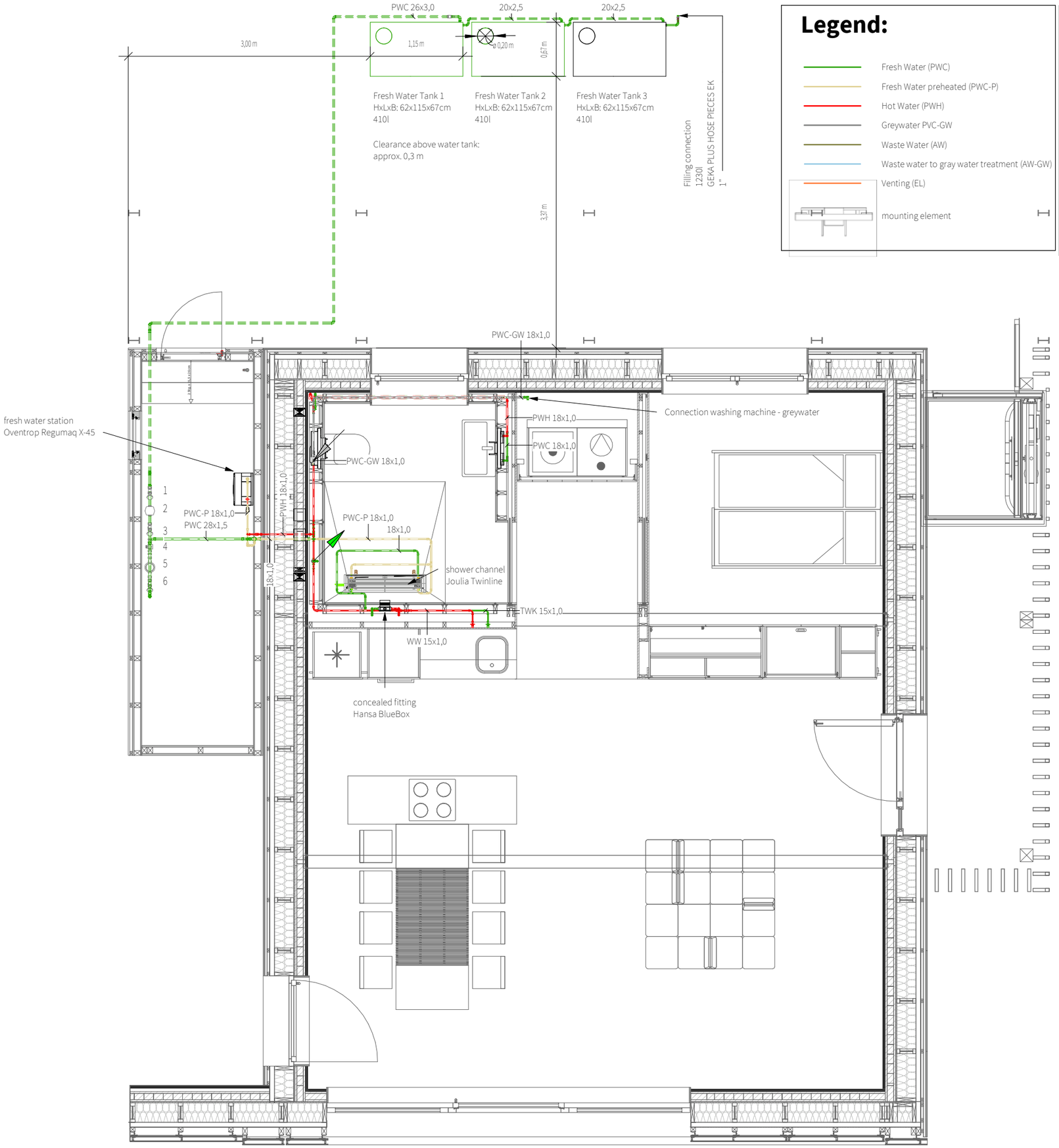

Legend:

- Fresh Water (PWC)
- Fresh Water preheated (PWC-P)
- Hot Water (PWH)
- Greywater PVC-GW
- Waste Water (AW)
- Waste water to gray water treatment (AW-GW)
- Venting (EL)
- mounting element

General:

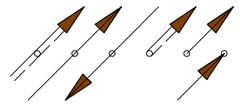

Strand direction arrows

1 Angle seat valve
2 Pump
3 KVR valve
4 Filter
5 Water meter
6 Angle seat valve

levelup

solar decathlon 21-22 europe
WUPPERTAL GERMANY

Scale
1 : 50

Phase
D#6

Drawing Content
Plumbing Plan - Level 01

PL-1003

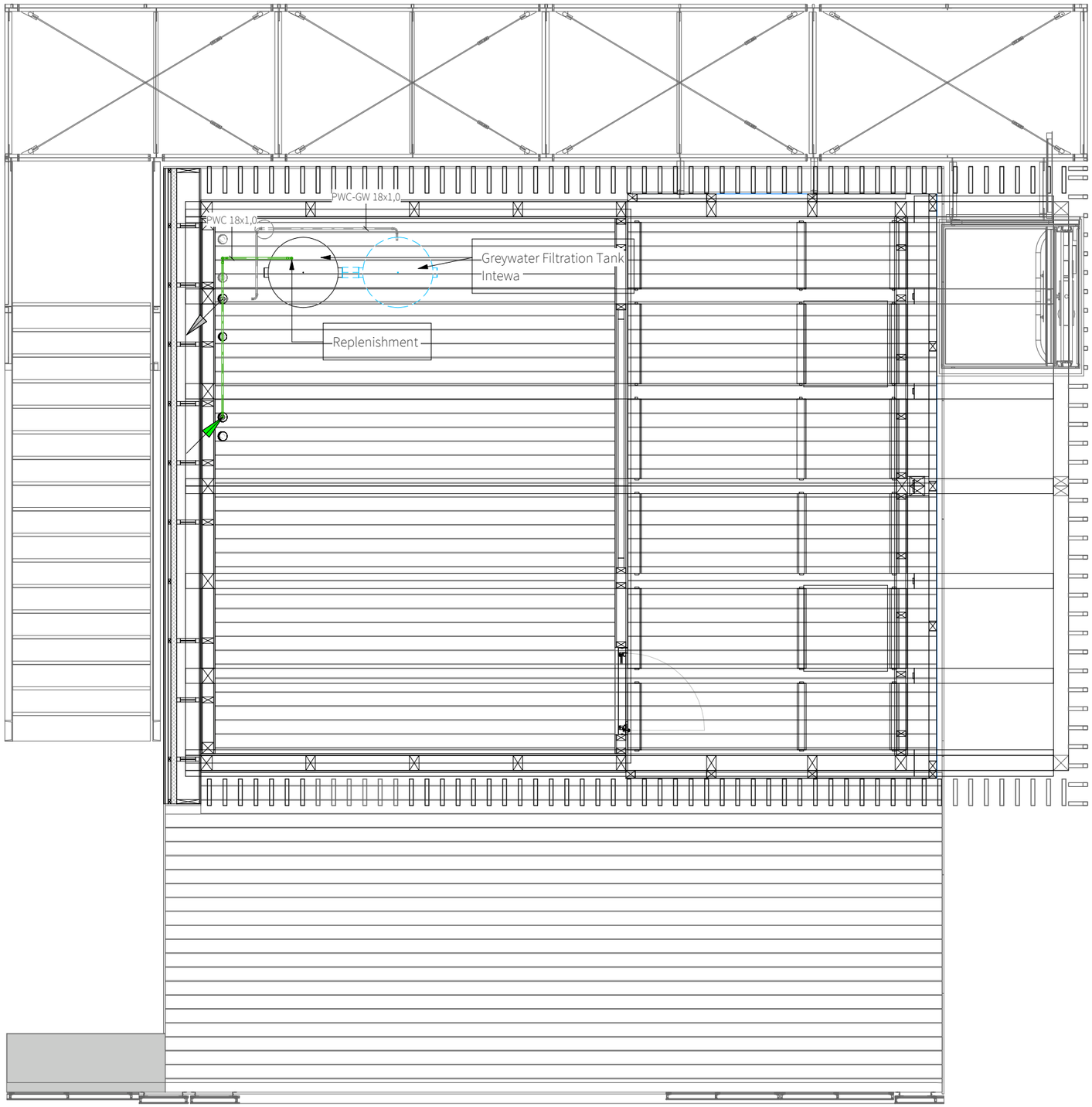

General:

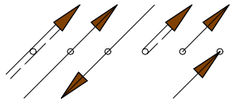

Strand direction arrows

1 Angle seat valve
2 Pump
3 KVR valve
4 Filter
5 Water meter
6 Angle seat valve

Legend:

- Fresh Water (PWC)
- Fresh Water preheated (PWC-P)
- Hot Water (PWH)
- Greywater PVC-GW
- Waste Water (AW)
- Waste water to gray water treatment (AW-GW)
- Venting (EL)
- mounting element

levelup

solar decathlon 21-22 europe
WUPPERTAL GERMANY

Scale
1 : 50

Phase
D#6

Drawing Content
Pumbing Plan - Level 02

PL-1004

Legend:

- Fresh Water (PWC)
- Fresh Water preheated (PWC-P)
- Hot Water (PWH)
- Greywater PVC-GW
- Waste Water (AW)
- Waste water to gray water treatment (AW-GW)
- Venting (EL)
- mounting element

General:

Strand direction arrows

1 Angle seat valve
2 Pump
3 KVR valve
4 Filter
5 Water meter
6 Angle seat valve

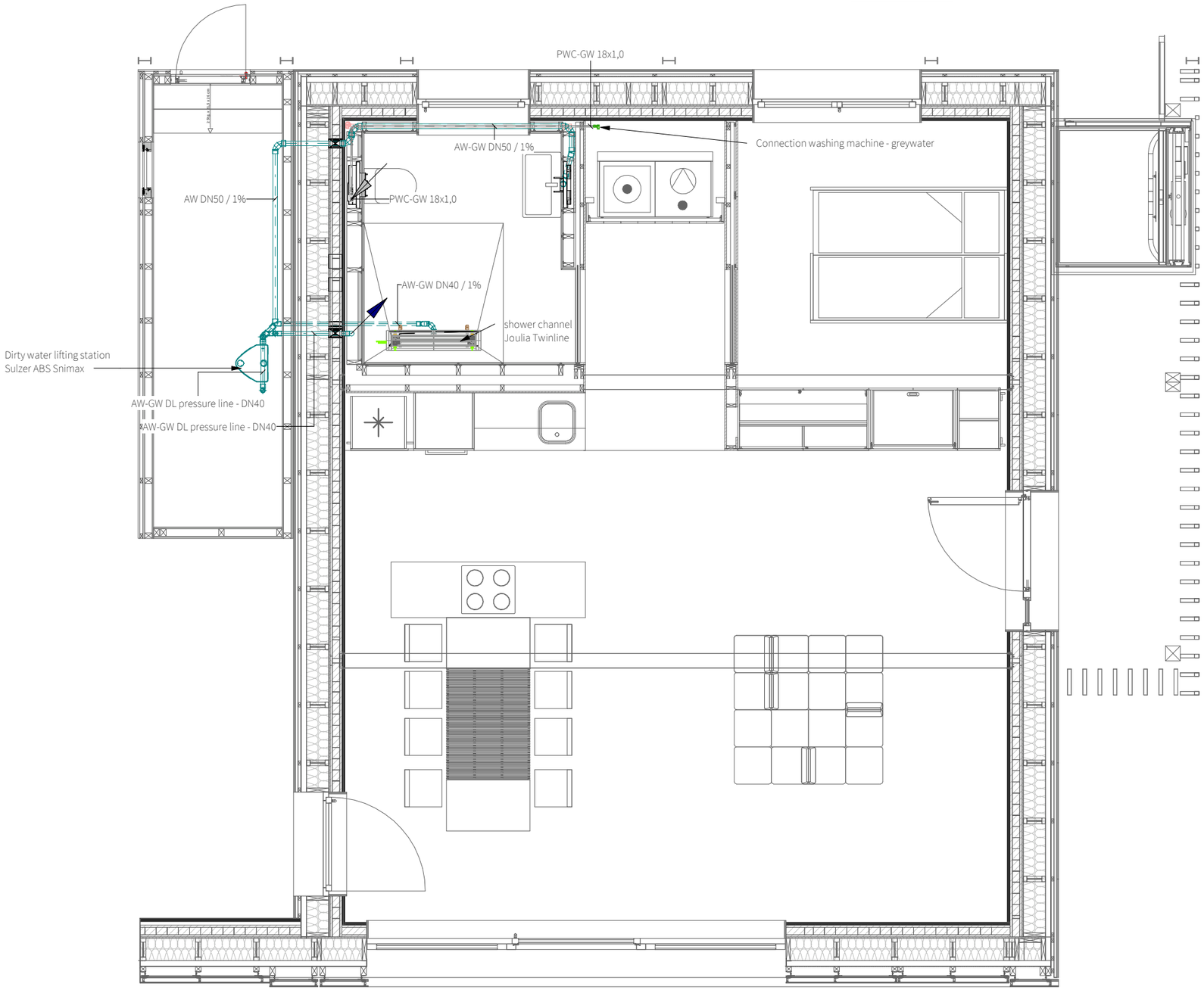

levelup

solar decathlon europe 21-22
WUPPERTAL GERMANY

Scale
1 : 50

Phase
D#6

Drawing Content
Greywater - Level01

PL-2001

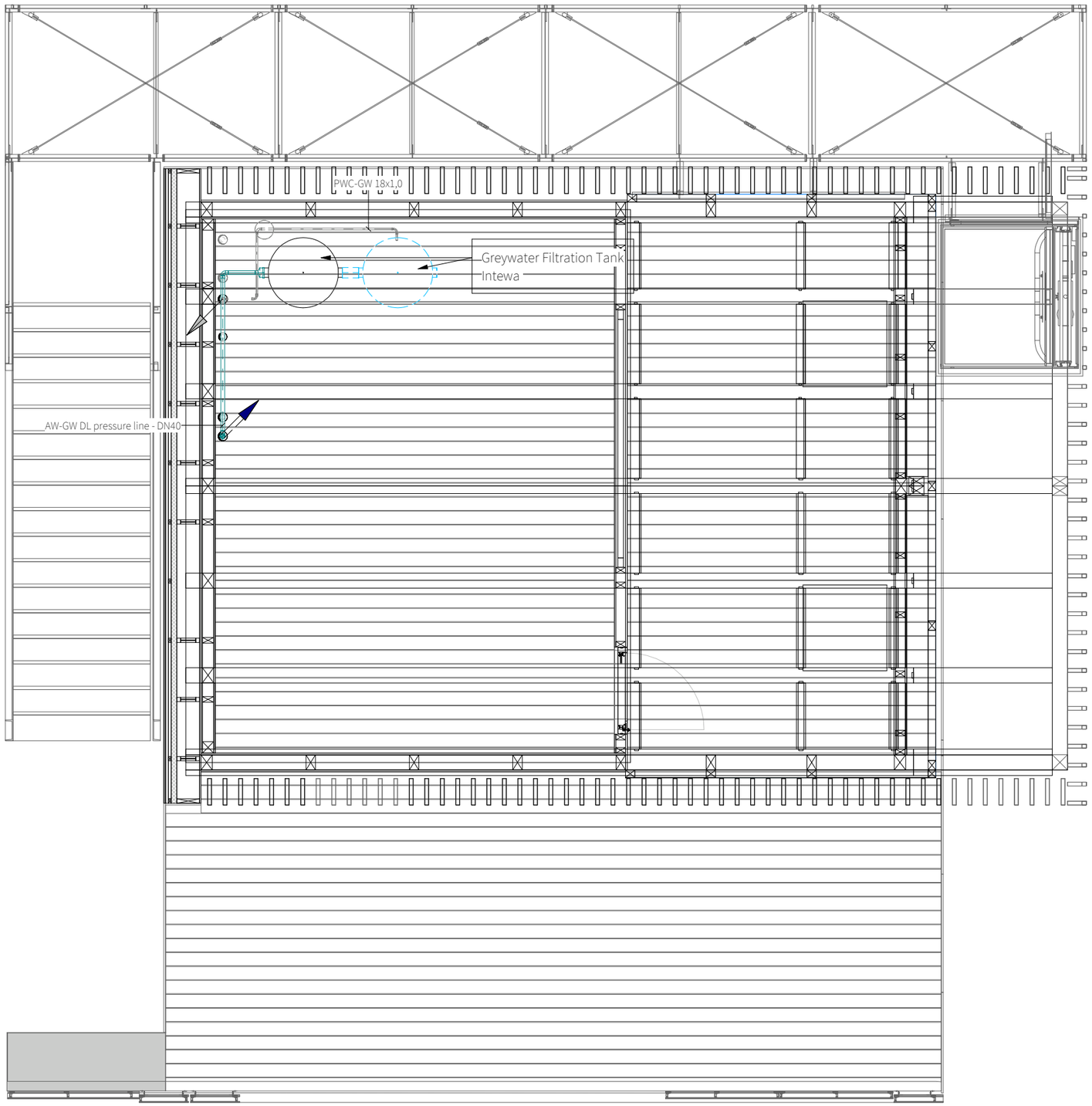

General:

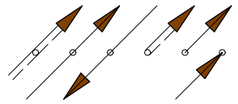

Strand direction arrows

1 Angle seat valve
2 Pump
3 KVR valve
4 Filter
5 Water meter
6 Angle seat valve

Legend:

Fresh Water (PWC)
Fresh Water preheated (PWC-P)
Hot Water (PWH)
Greywater PVC-GW
Waste Water (AW)
Waste water to gray water treatment (AW-GW)
Venting (EL)
mounting element

levelup

solar decathlon europe 21-22
WUPPERTAL GERMANY

Scale
1 : 50

Phase
D#6

Drawing Content
Greywater - Level 02

PL-2002

Legend:

- Fresh Water (PWC)
- Fresh Water preheated (PWC-P)
- Hot Water (PWH)
- Greywater PVC-GW
- Waste Water (AW)
- Waste water to gray water treatment (AW-GW)
- Venting (EL)
- mounting element

General:

Strand direction arrows

1 Angle seat valve
2 Pump
3 KVR valve
4 Filter
5 Water meter
6 Angle seat valve

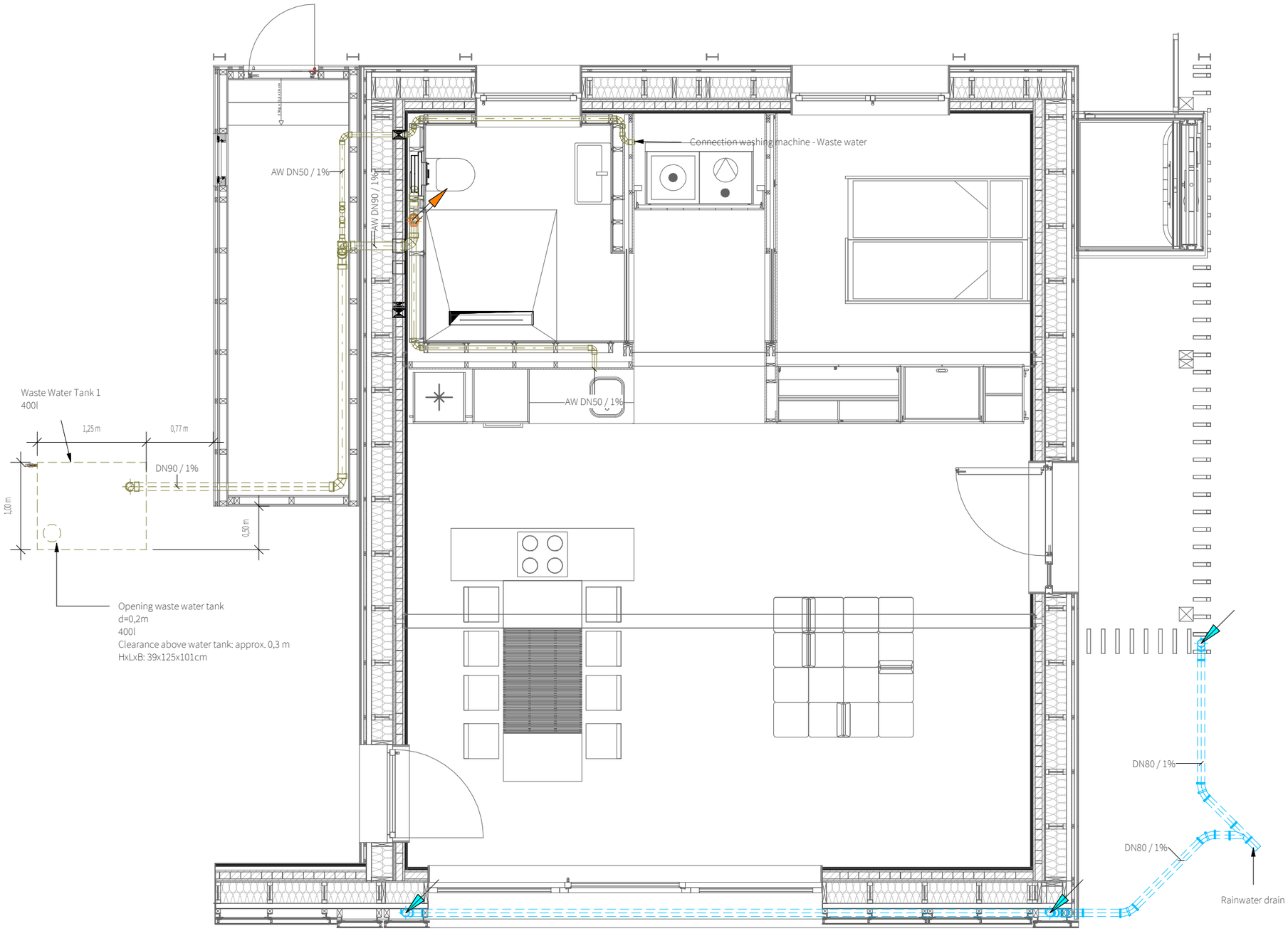

levelup

solar decathlon europe 21-22
WUPPERTAL GERMANY

Scale
1 : 50

Phase
D#6

Drawing Content
Drain / Waste / Vent - Level 01

PL-3001

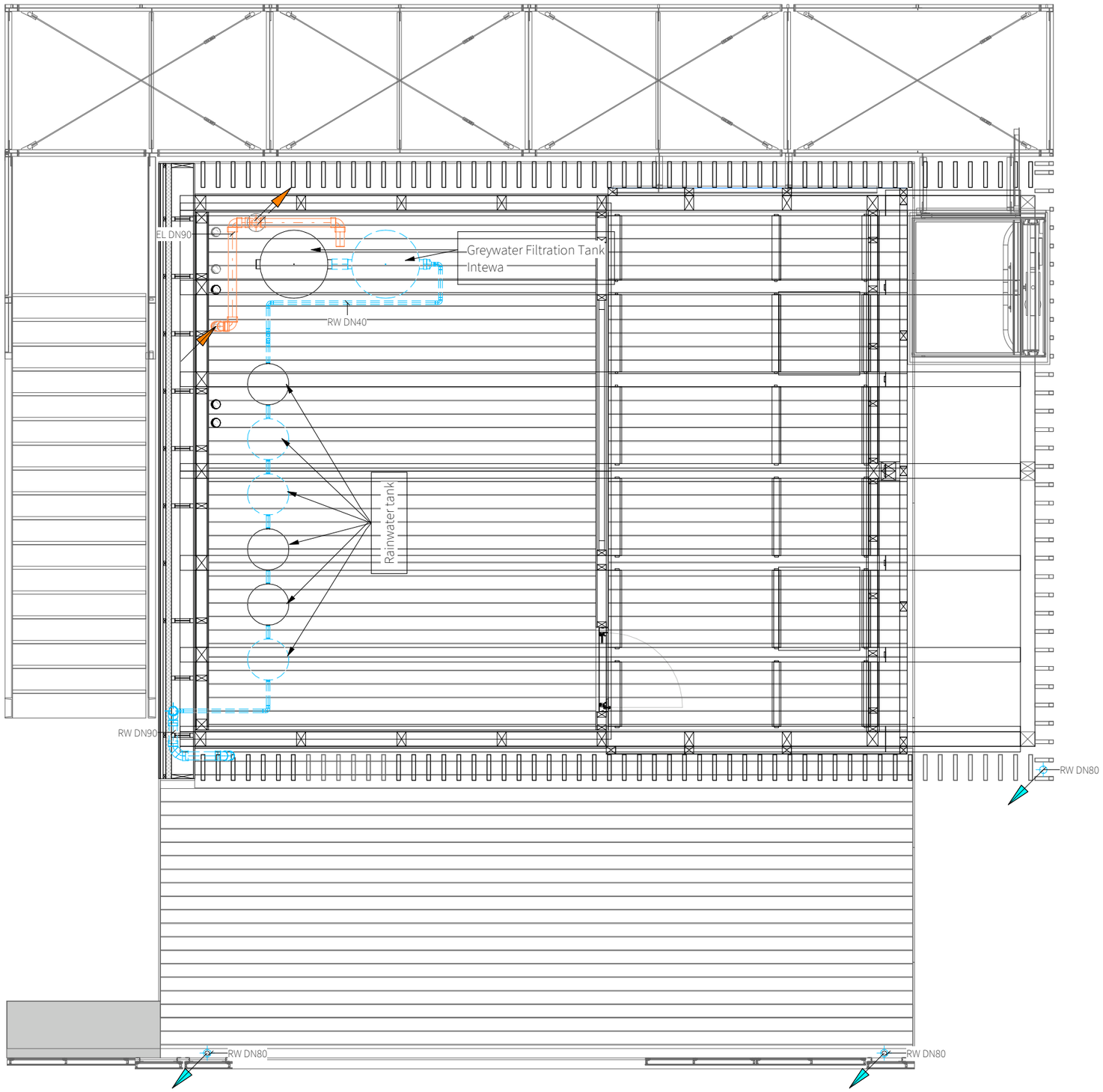

General:

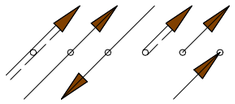

Strand direction arrows

1 Angle seat valve
2 Pump
3 KVR valve
4 Filter
5 Water meter
6 Angle seat valve

Legend:

Fresh Water (PWC)
Fresh Water preheated (PWC-P)
Hot Water (PWH)
Greywater PVC-GW
Waste Water (AW)
Waste water to gray water treatment (AW-GW)
Venting (EL)
mounting element

levelup

solar decathlon 21-22 europe
WUPPERTAL GERMANY

Scale
1 : 50

Phase
D#6

Drawing Content
Drain / Waste / Vent - Level 02

PL-3002

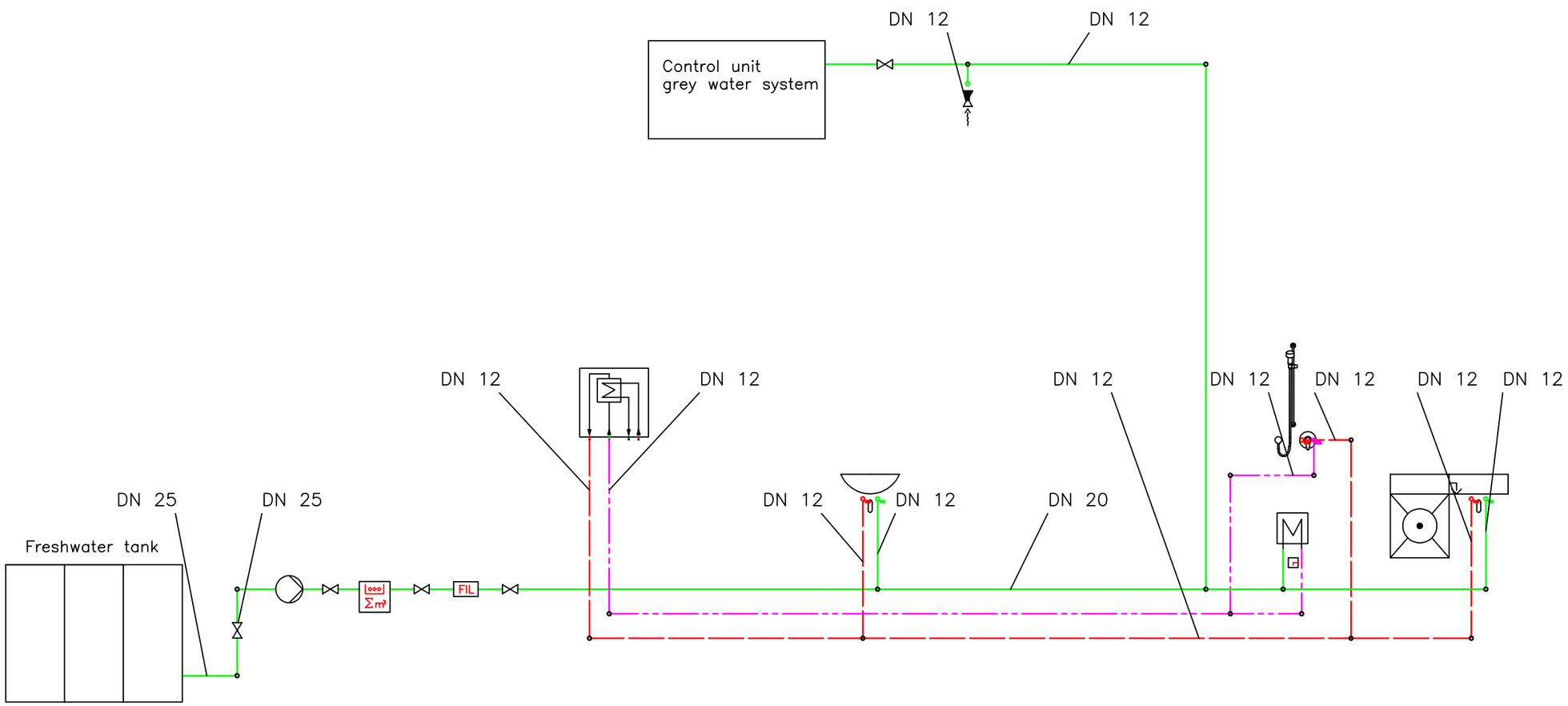

Legend:

- Potable water cold
- Potable water hot
- Potable water cold pre-heated
- Kitchen unit
- Heat exchanger
- Shower
- Shut-off fitting
- Outlet fitting
- Pump
- Water meter
- Shower channel heat exchanger
- Water filter
- Washbasin

levelup

solar decathlon europe 21-22
WUPPERTAL GERMANY

Scale

Phase
D#6

Drawing Content
DW-Schematic diagram

PL-4001

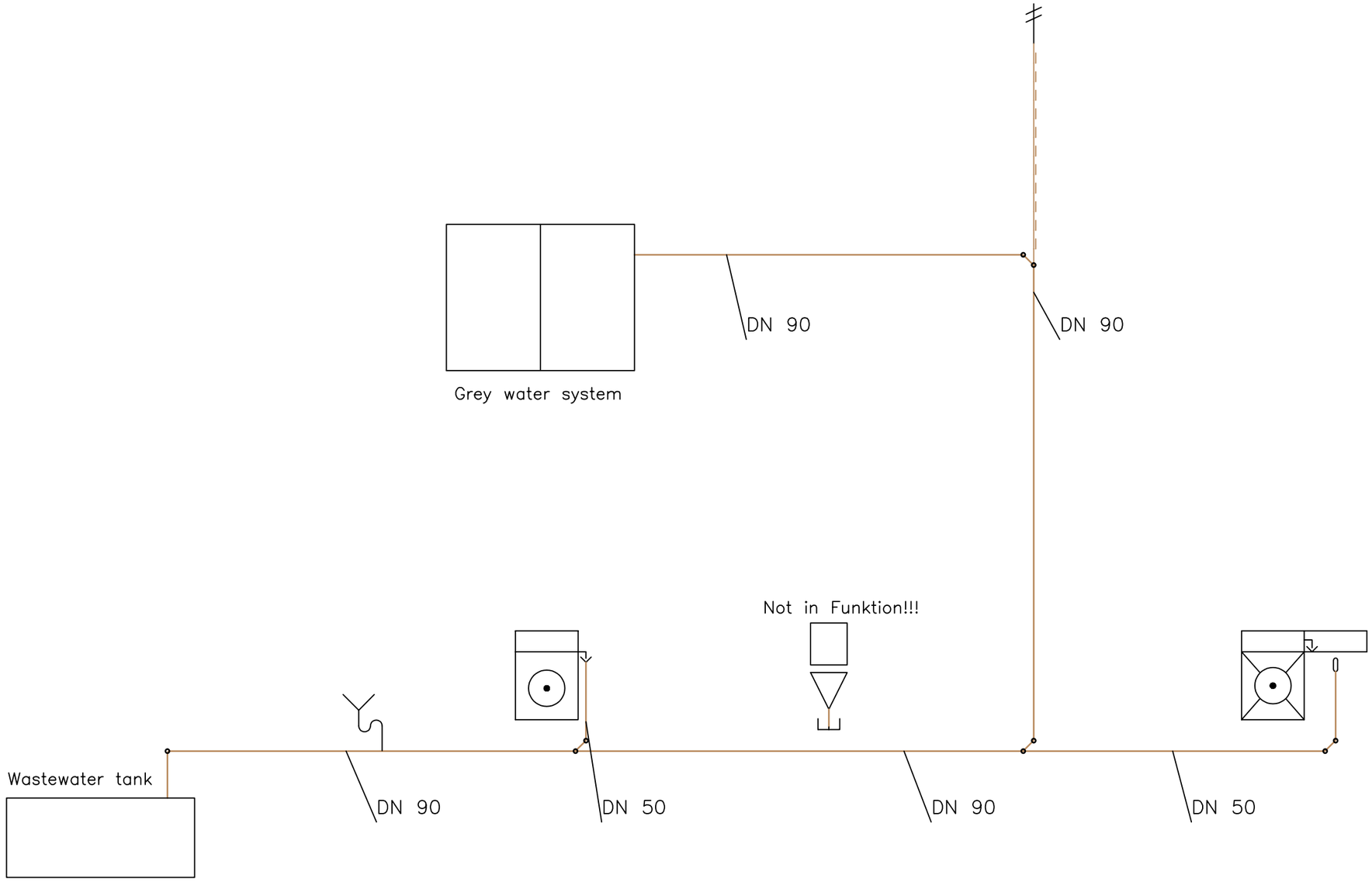

Legend:

Waste water

Washing machine

Kitchen unit

Toilet

Flange with shut-off cap DN 100

Funnel siphon

Ventilation and deaeration

levelup

solar decathlon europe 21»22
WUPPERTAL GERMANY

Scale

Phase
D#6

Drawing Content
BW - Schematic diagram

PL-4002

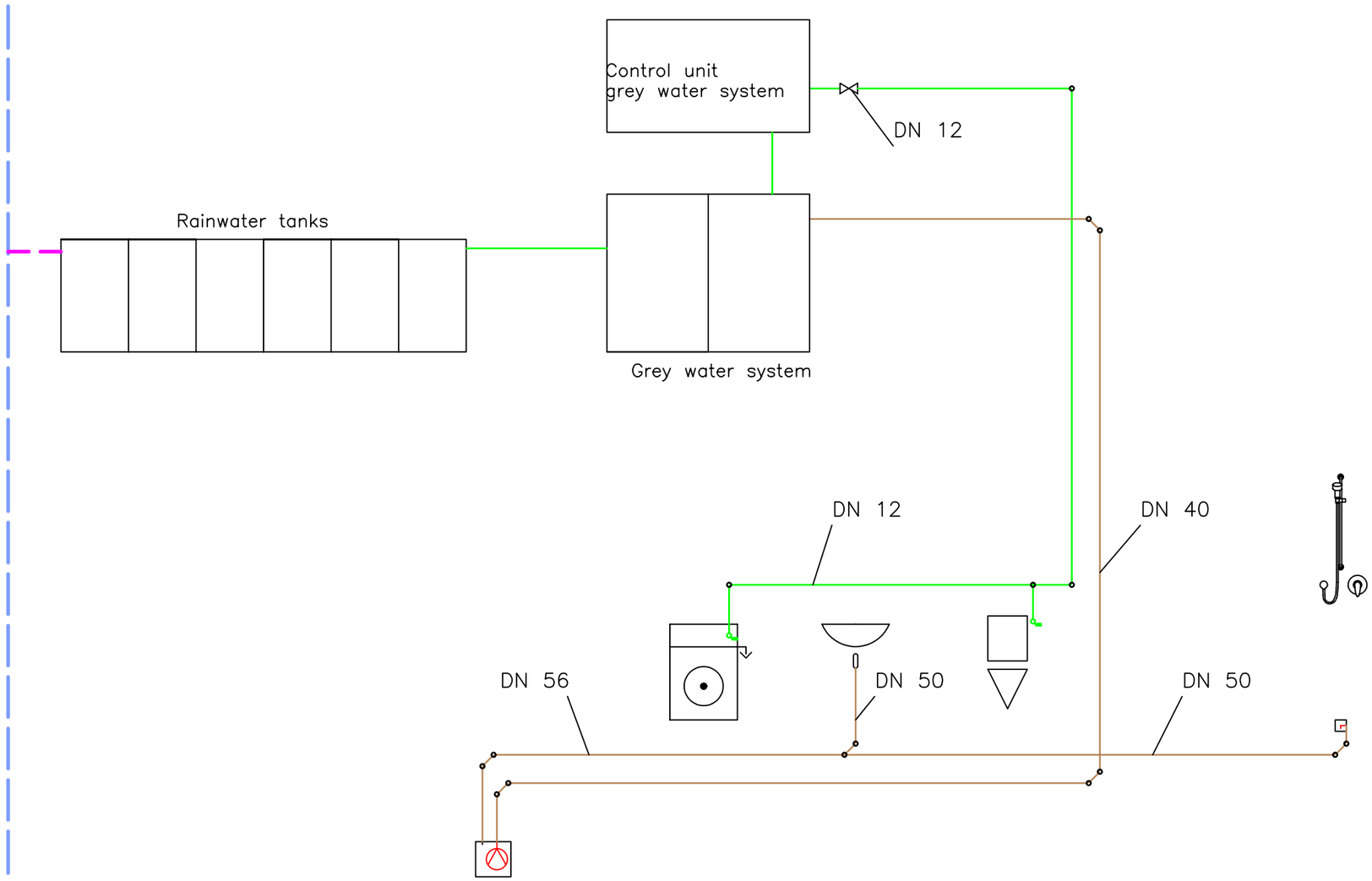

Legend:

- Process water
- Rainwater
- Rainwater inlet and overflow
- Grey water
- Washing machine
- Shower
- Shut–off fitting
- Lifting pump
- Washbasin
- Toilet

levelup

solar decathlon europe 21»22
WUPPERTAL GERMANY

Scale

Phase
D#6

Drawing Content
GW - Schematic diagram

PL-4003

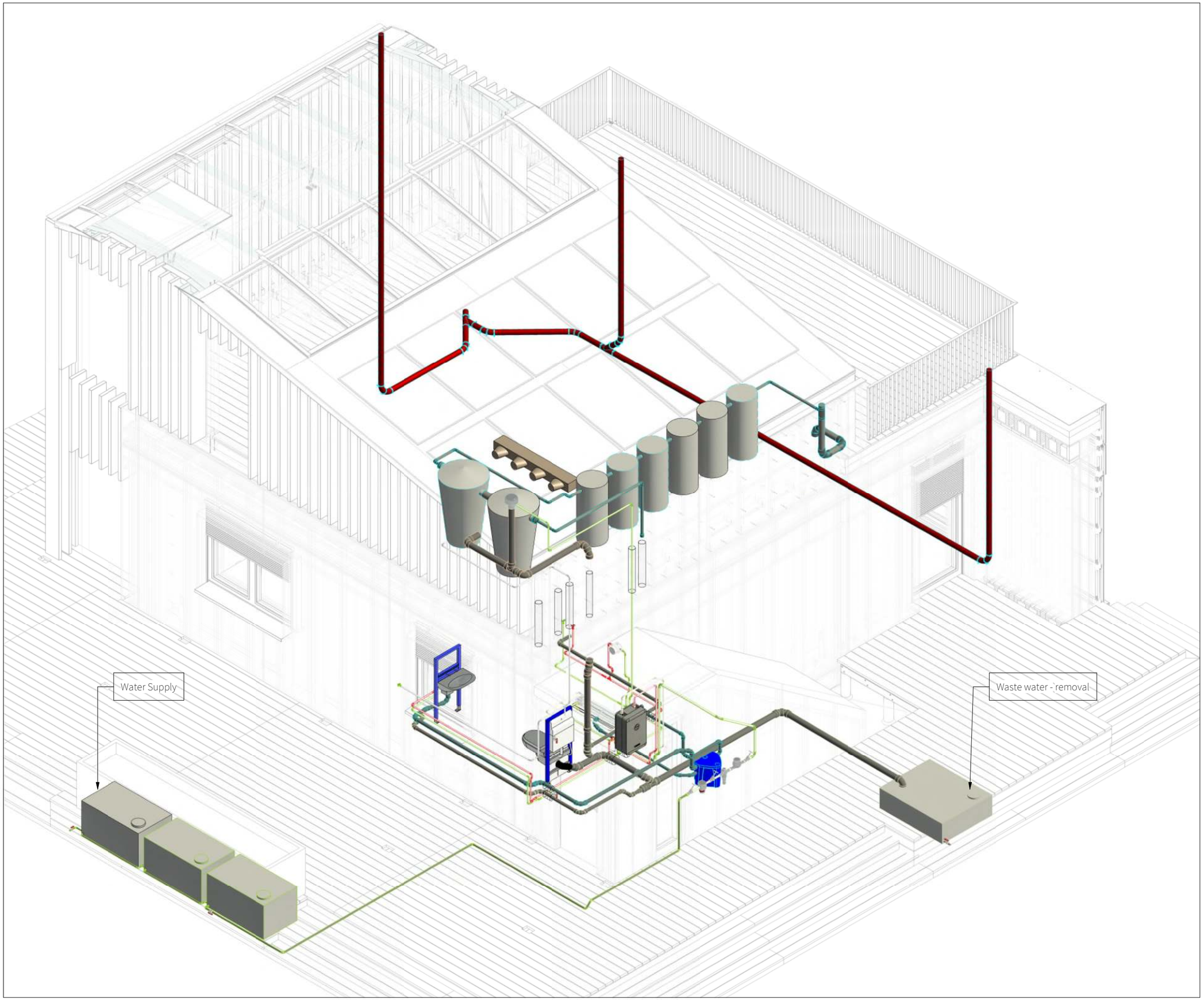

levelup

solar decathlon 21-22 europe
WUPPERTAL GERMANY

Scale

Phase
D#6

Drawing Content
Supply and removal - Isometric

PT-5001

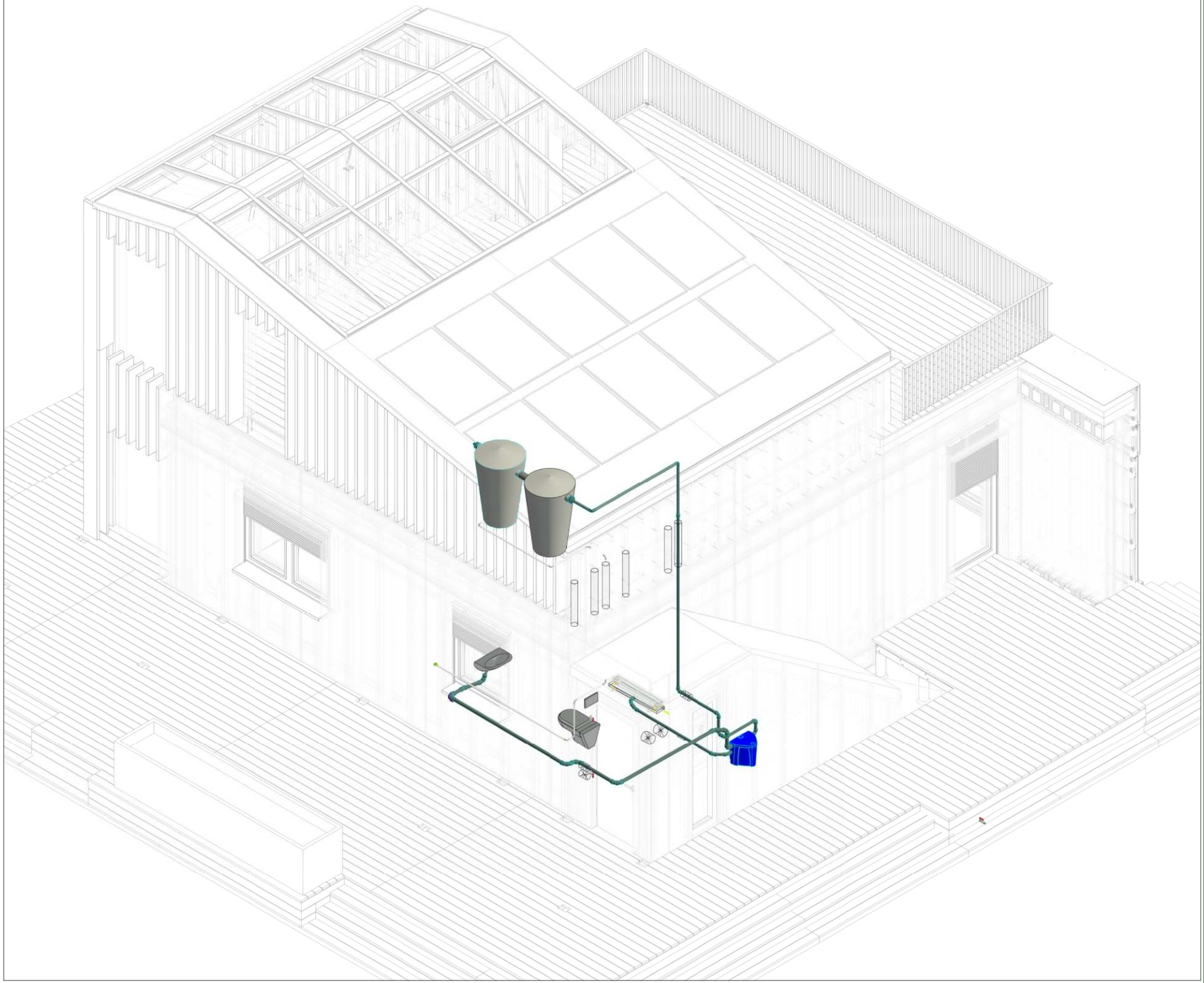

levelup

solar decathlon 21-22 europe

WUPPERTAL GERMANY

Scale

Phase
D#6

Drawing Content
Greywater - Isometric

PT-5101

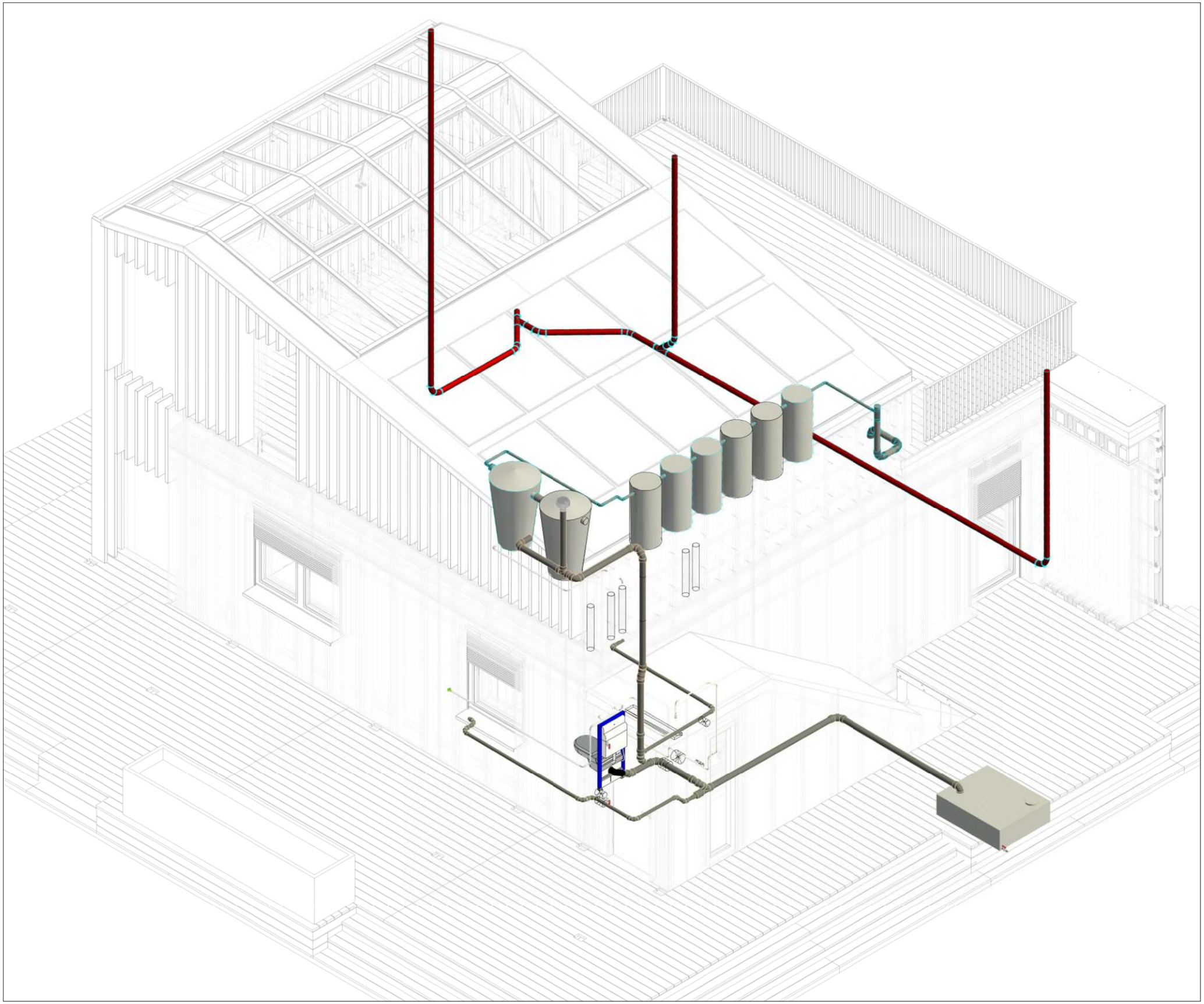

levelup

solar decathlon 21-22 europe
WUPPERTAL GERMANY

Scale

Phase
D#6

Drawing Content
Drain Waste Vent Isometric

PL-5201

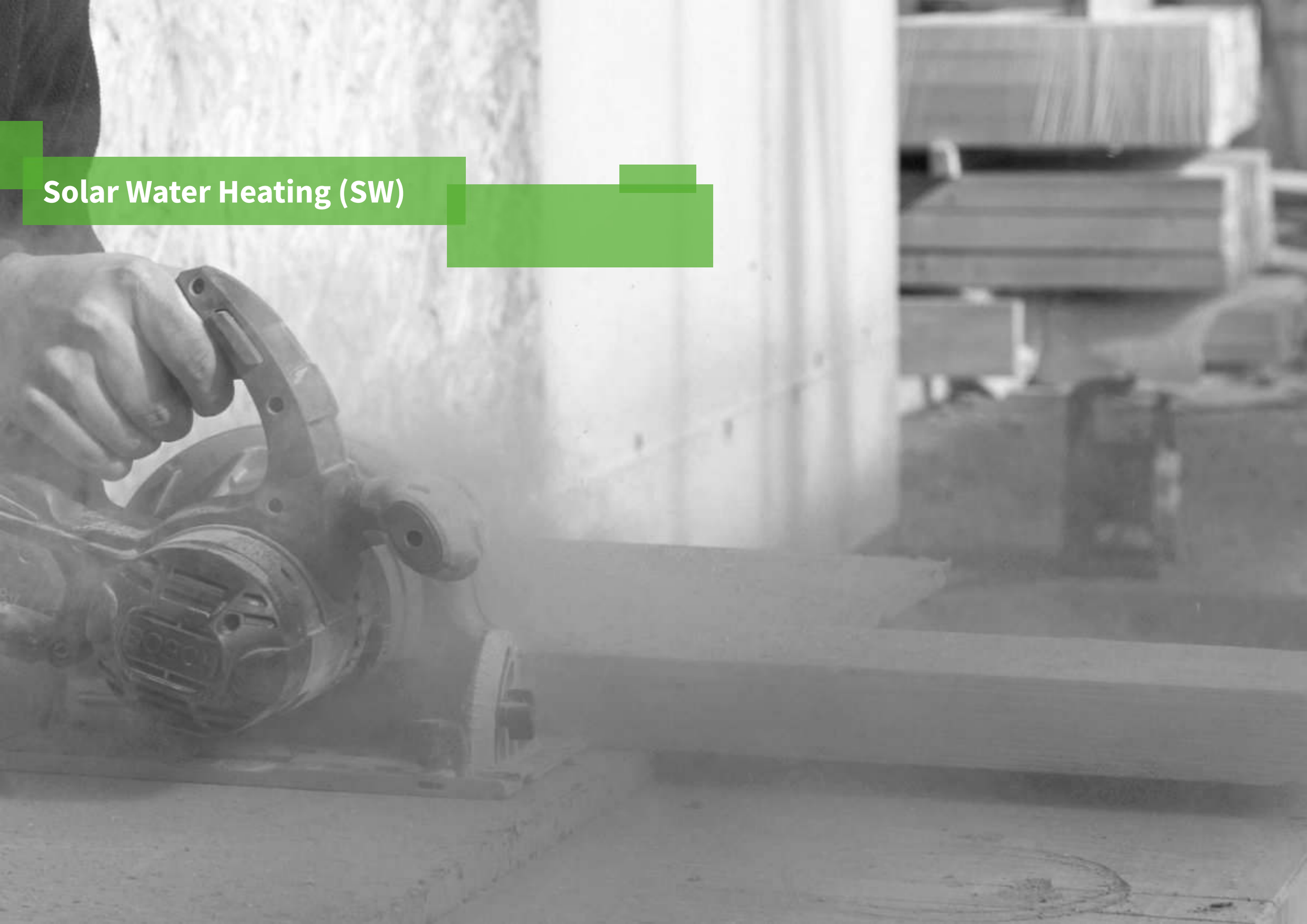

Solar Water Heating (SW)

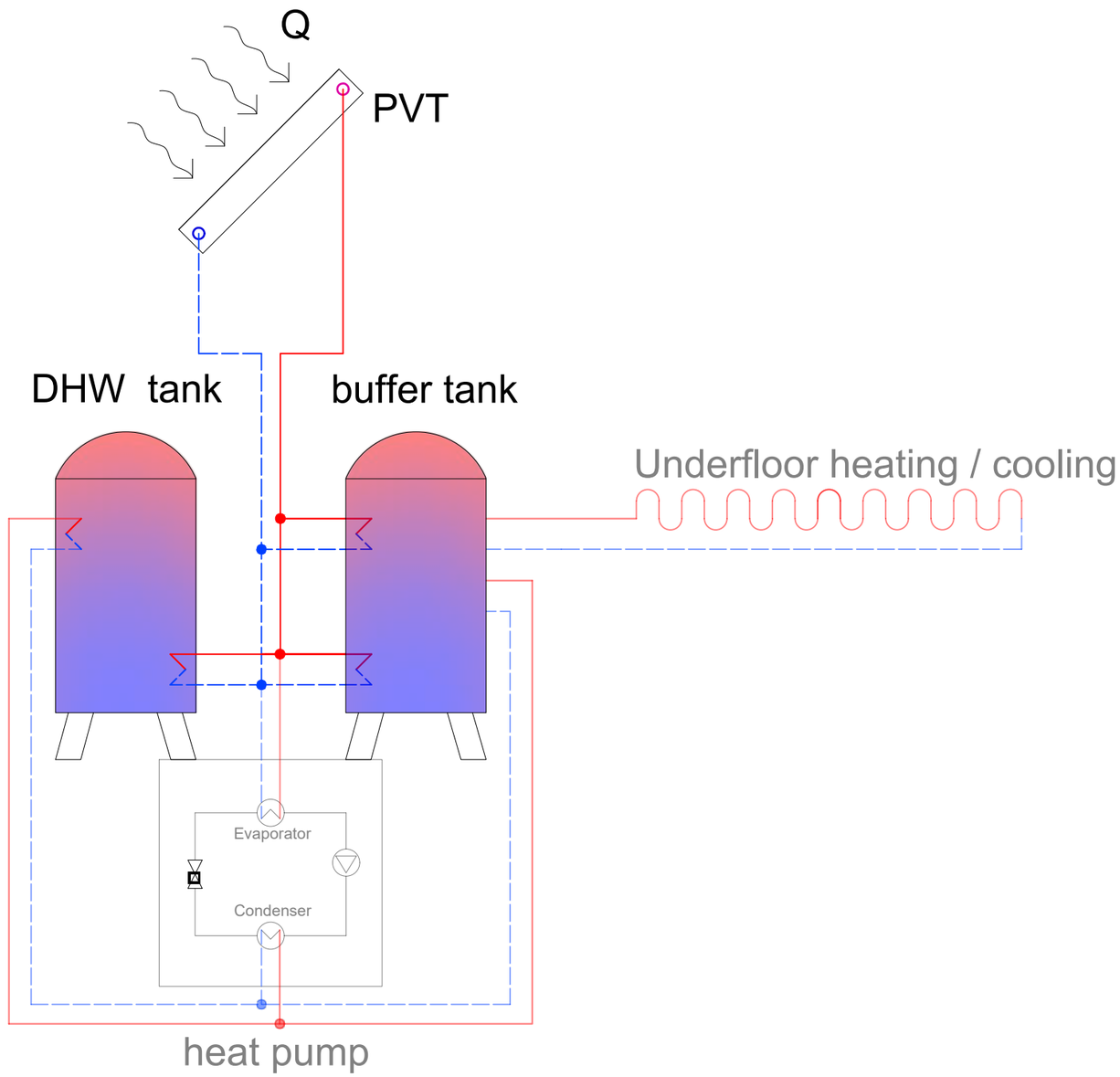

levelup

solar decathlon 21-22 europe
WUPPERTAL GERMANY

General	GE
Architecture	AR
Interiors	IN
Structural	ST
Plumbing	PL
Solar Water Heating	**SW**
Mechanical	ME
Electrical	EL
Photovoltaic System	PV
Teleco. & Build. Aut. System	BAS
Instrumentation Drawings	ID
Site Operations	SO
Fire Protection	FP
Health & Safety	HS
Public Tour	PT

Scale
n.t.s. (A3 420x297)

Phase
D#6

Drawing Content-HDU
Conceptual Drawings

SW-0001

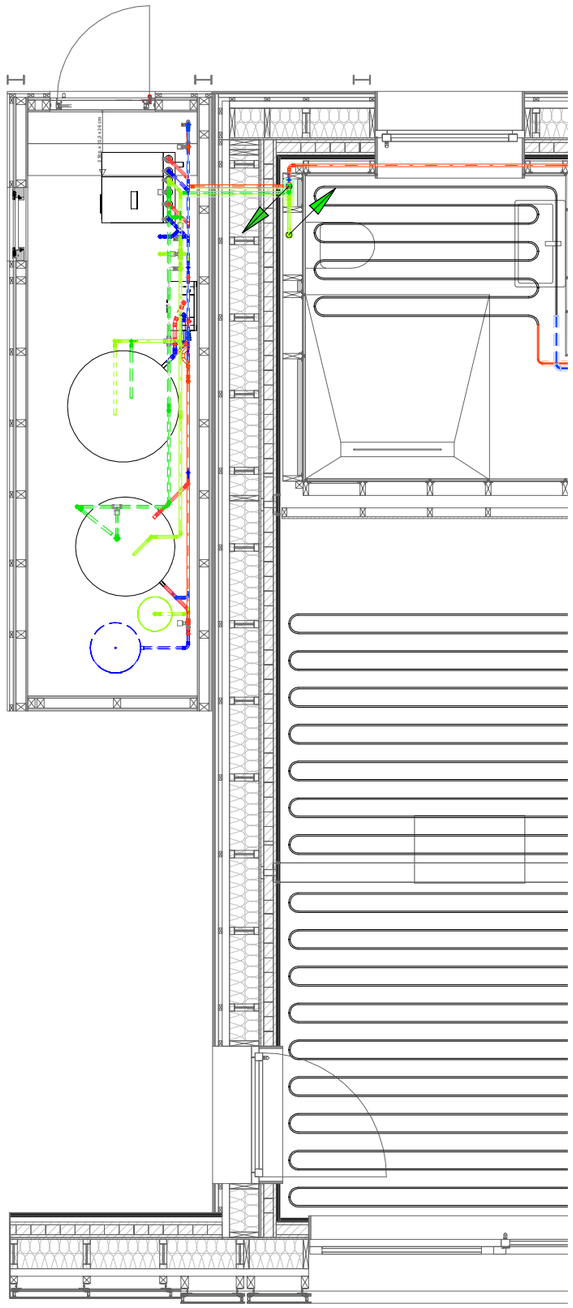

Solar Water Heating - Level 01

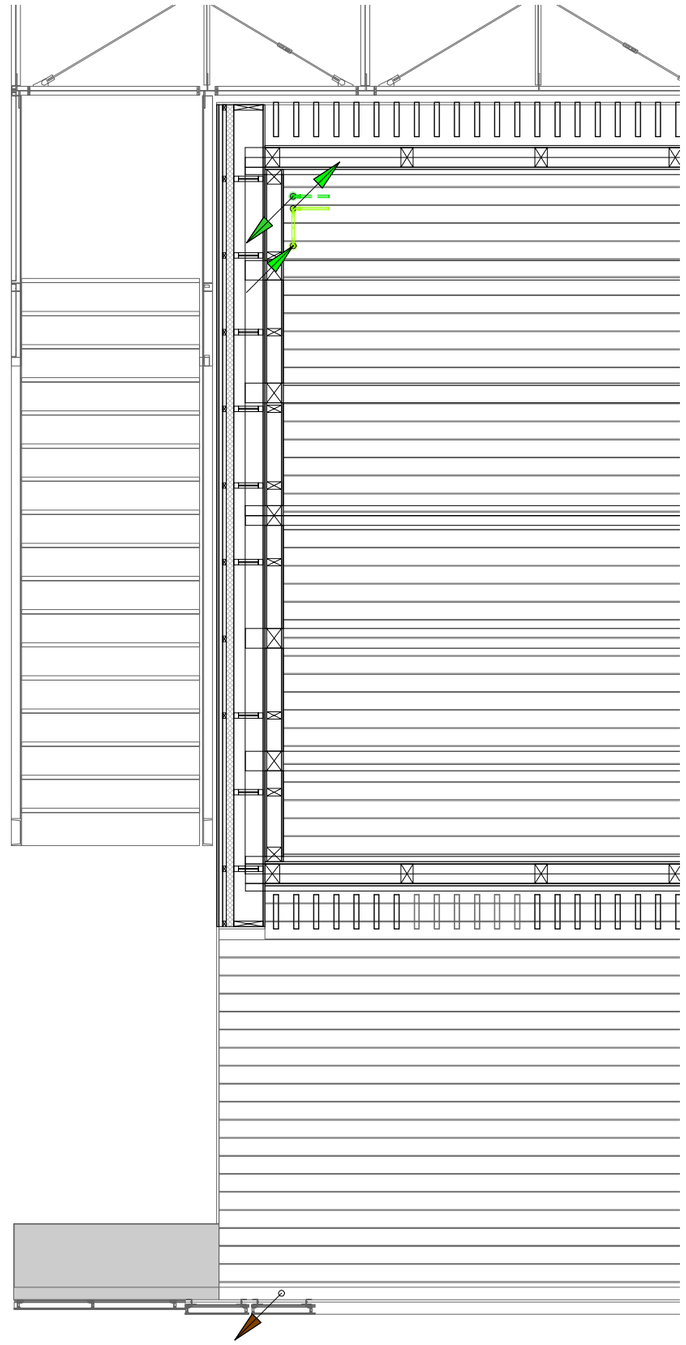

Solar Water Heating - Level 02

levelup

solar decathlon 21-22 europe

WUPPERTAL GERMANY

Legend:

PVT flow heating

PVT return heating

Scale
1 : 50

Phase
D#6

Drawing Content
Plan - Level 01 + 02

SW-10

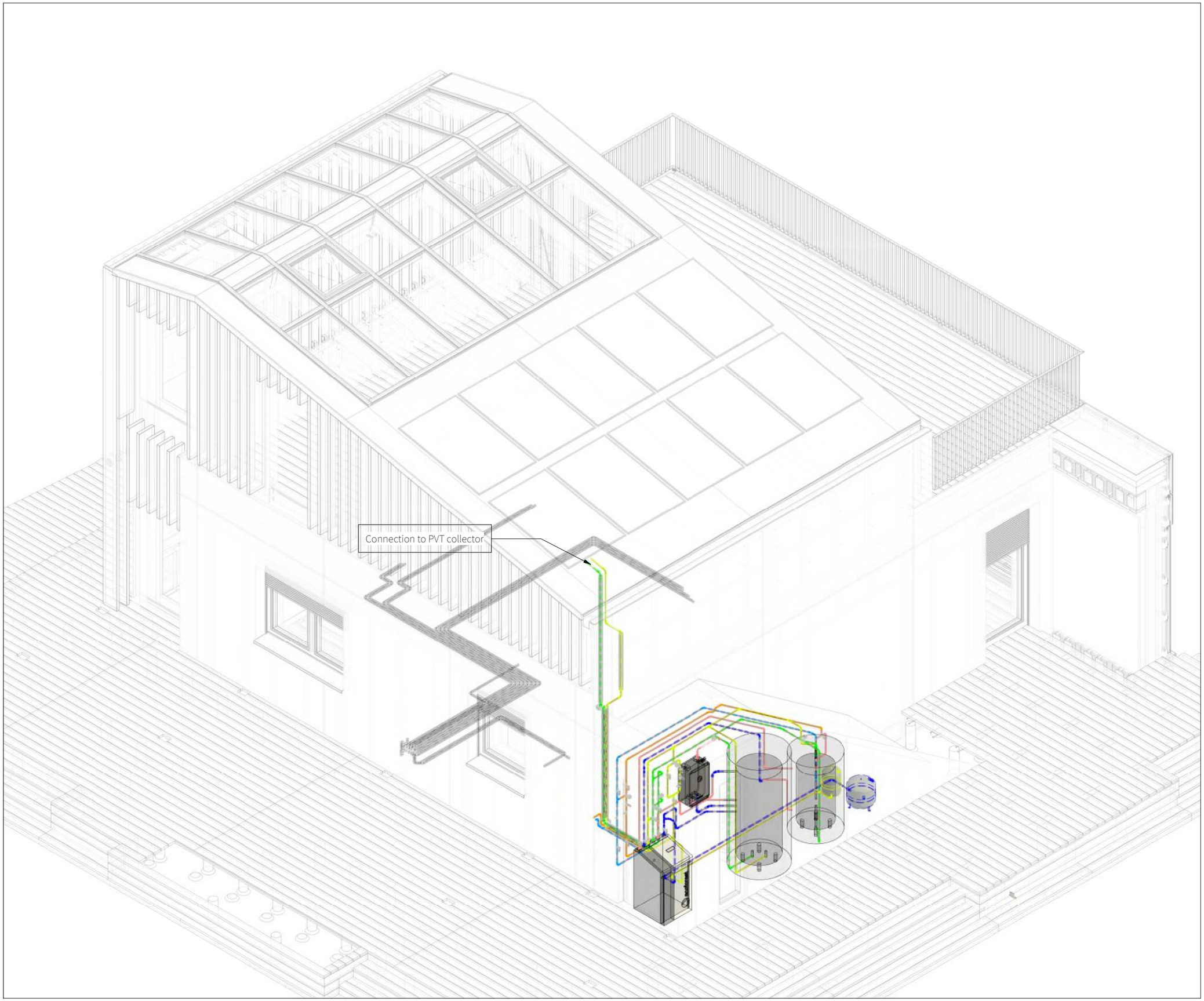

levelup

solar decathlon 21-22 europe

WUPPERTAL GERMANY

Scale

Phase
D#6

Drawing Content
Solar Water Heating - Isometric

SW-2001

Mechanical (ME)

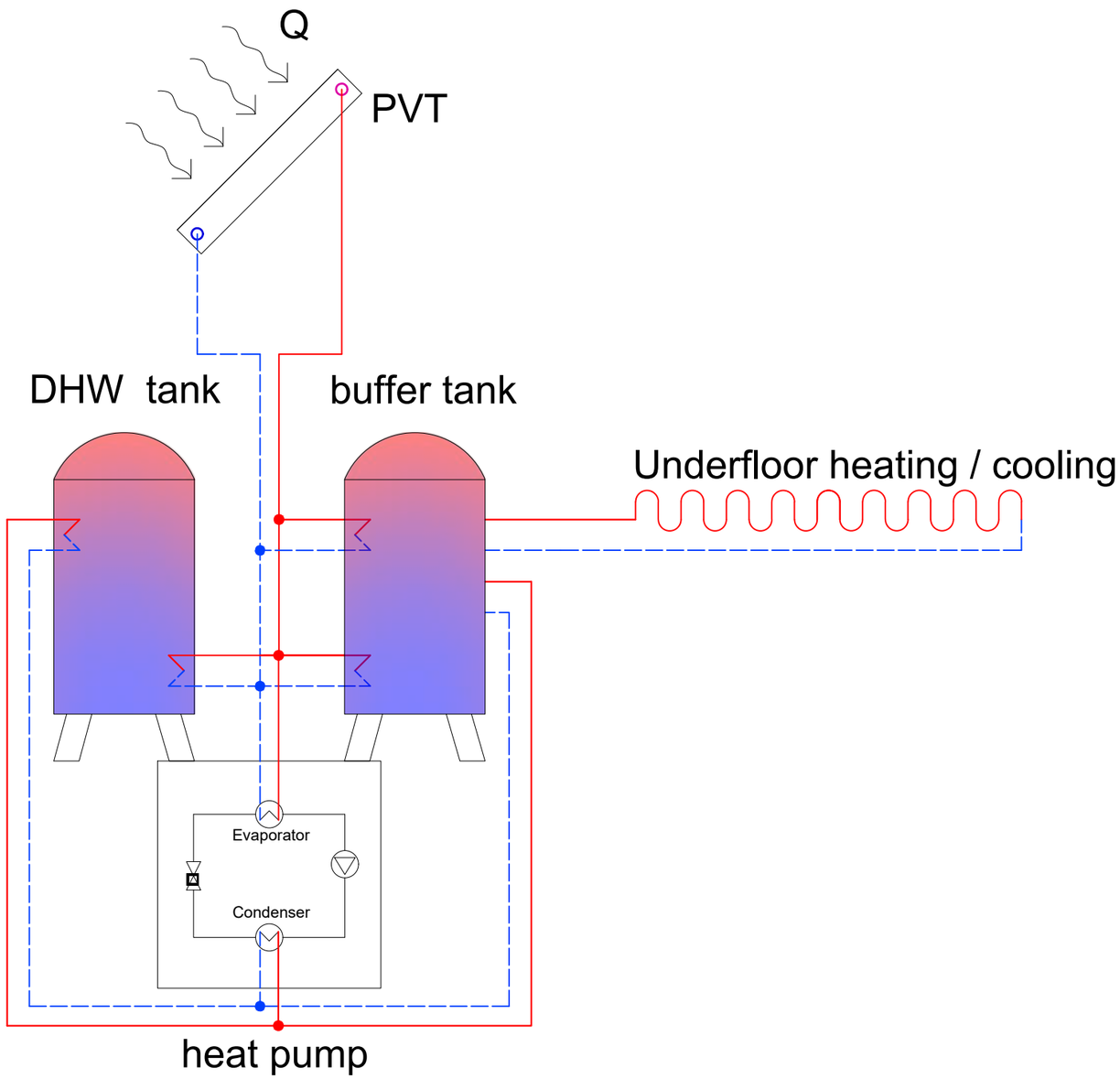

levelup

solar decathlon europe 21-22
WUPPERTAL GERMANY

Scale
n.t.s. (A3 420x297)

Phase
D#6

Drawing Content-HDU
Conceptual Drawings

ME-0001

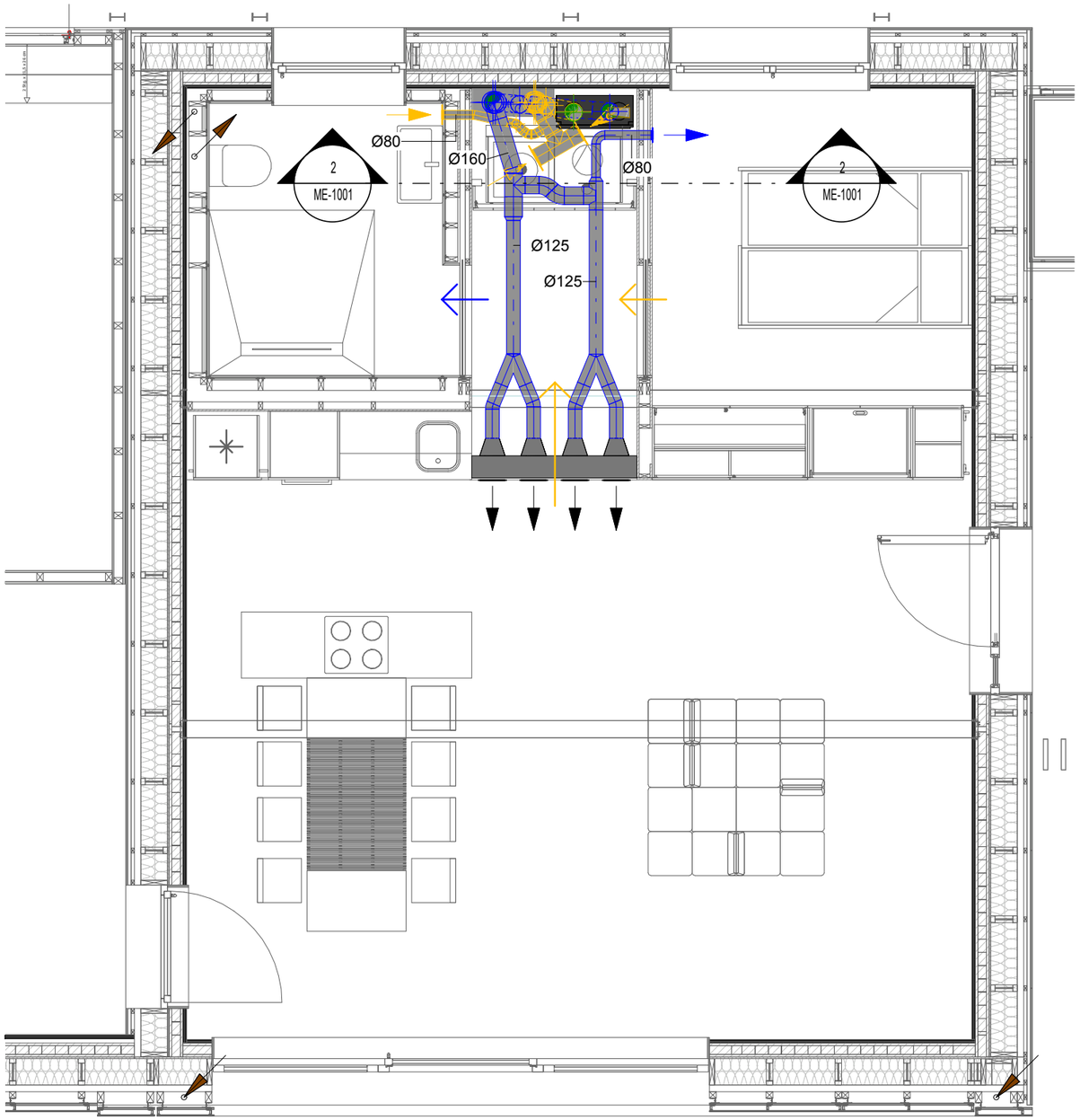

Legend:

- Supply air
- Exhaust air
- Outside air
- Exhaust air
- Silencer round
- Splitter silencer
- Volume flow controller
- Throttle valve

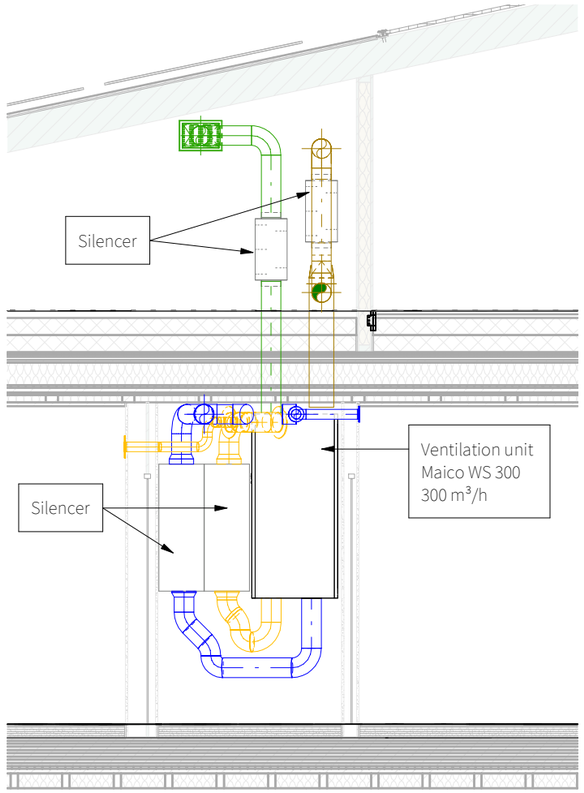

levelup

solar decathlon europe 21-22
WUPPERTAL GERMANY

Scale
1 : 50

Phase
D#6

Drawing Content
HVAC distribution Plan - Level01

ME-1001

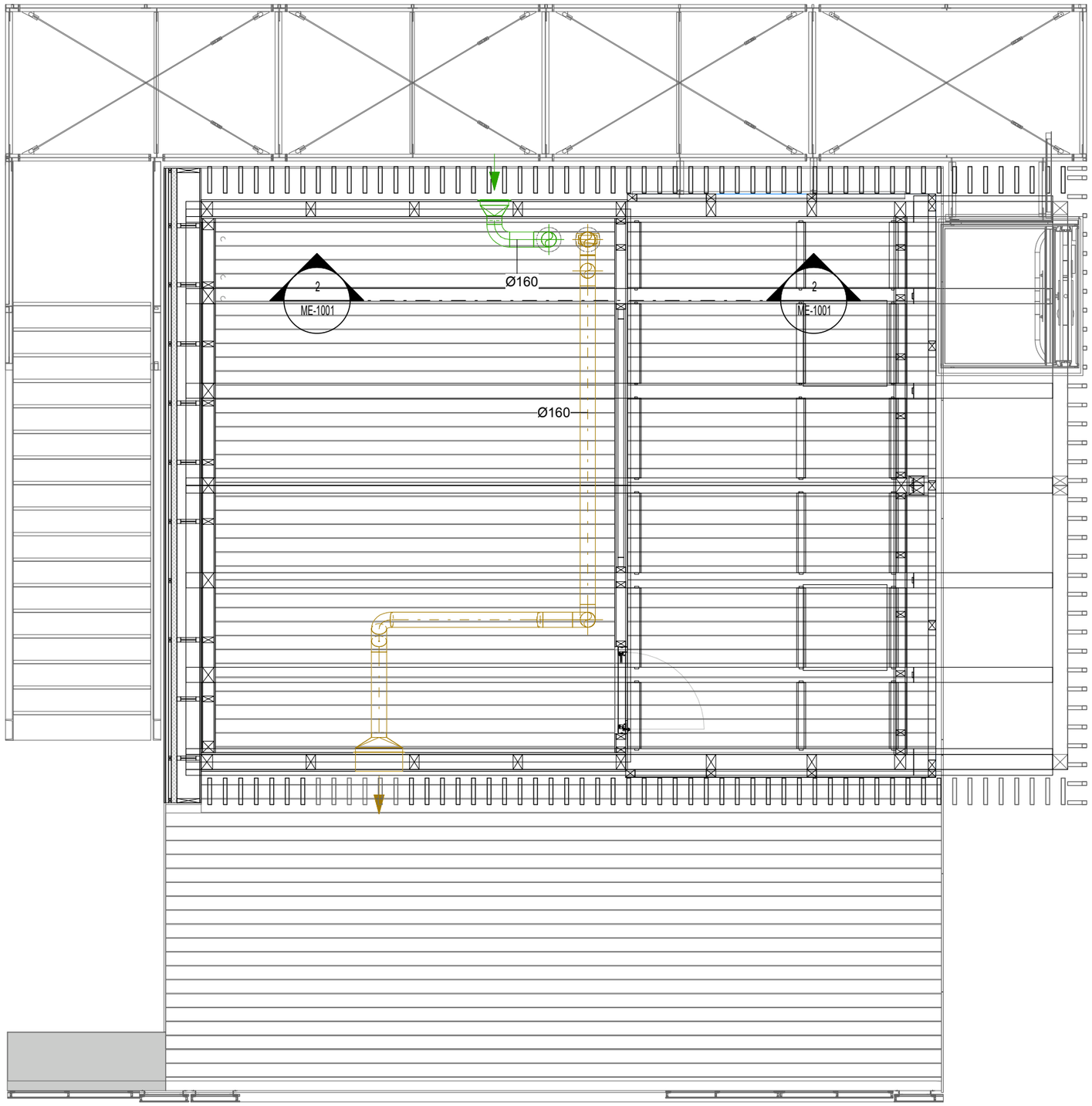

Legend:

- Supply air
- Exhaust air
- Outside air
- Exhaust air
- Silencer round
- Splitter silencer
- Volume flow controller
- Throttle valve

levelup

solar decathlon 21-22 europe
WUPPERTAL GERMANY

Scale
1 : 50

Phase
D#6

Drawing Content
HVAC distribution Plan - Level02

ME-1002

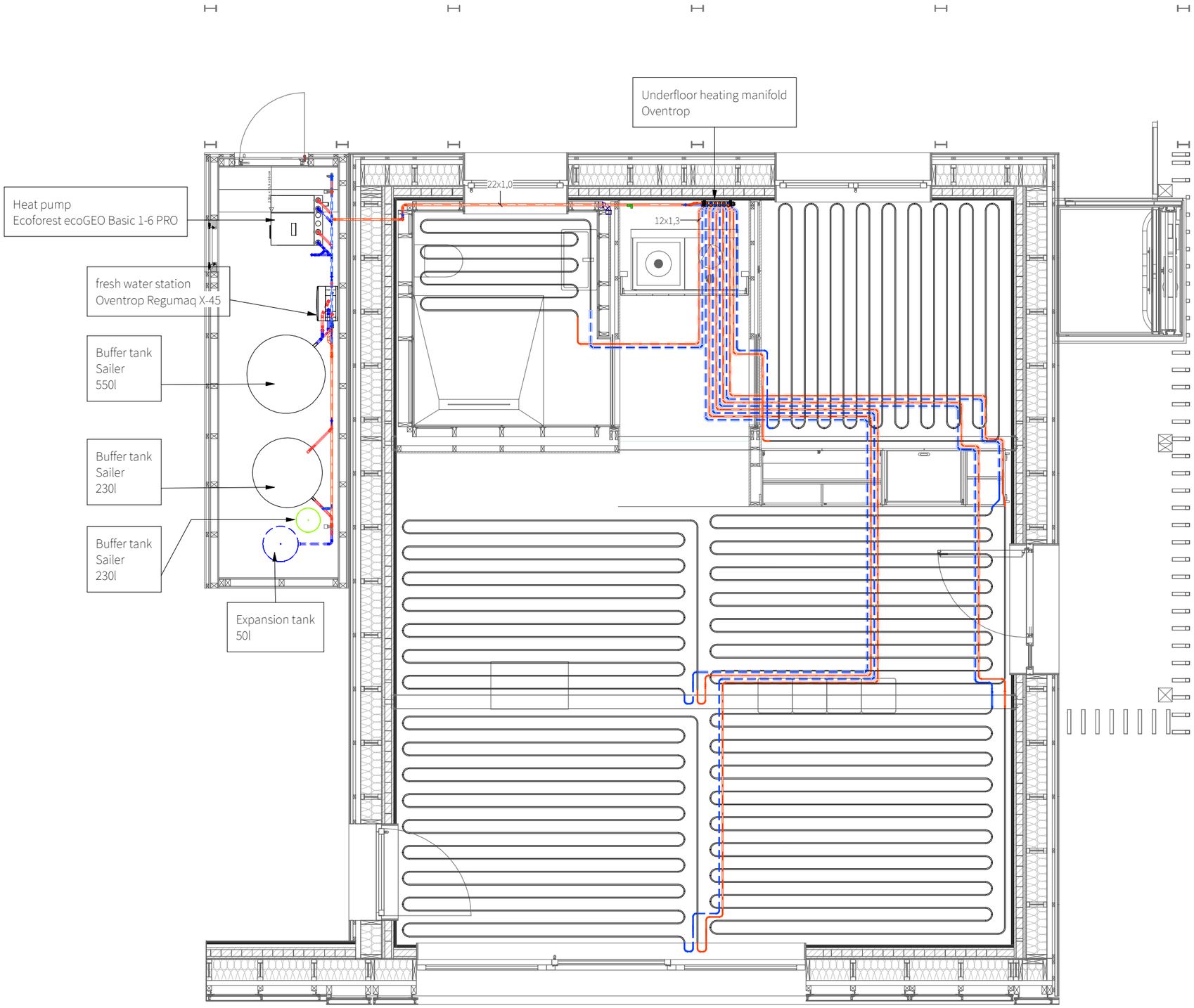

Legend:

flow heating

return heating

levelup

solar decathlon europe 21-22

WUPPERTAL GERMANY

Scale
1 : 50

Phase
D#6

Drawing Content
HVAC distribution Plan - Level 01

ME-1003

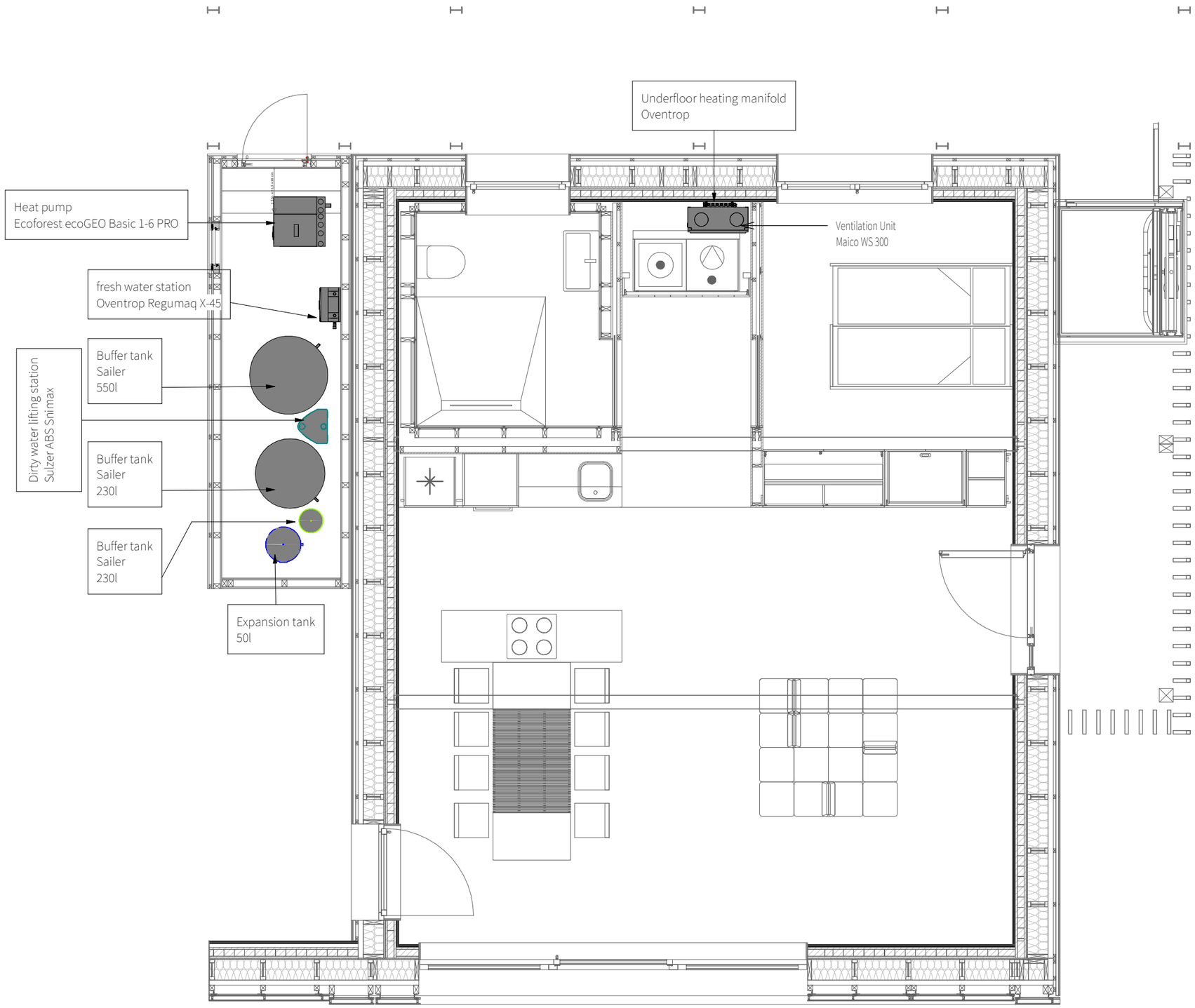

levelup

solar decathlon europe 21-22
WUPPERTAL GERMANY

Scale
1 : 50

Phase
D#6

Drawing Content
HVAC equipment - Level 01

ME-1101

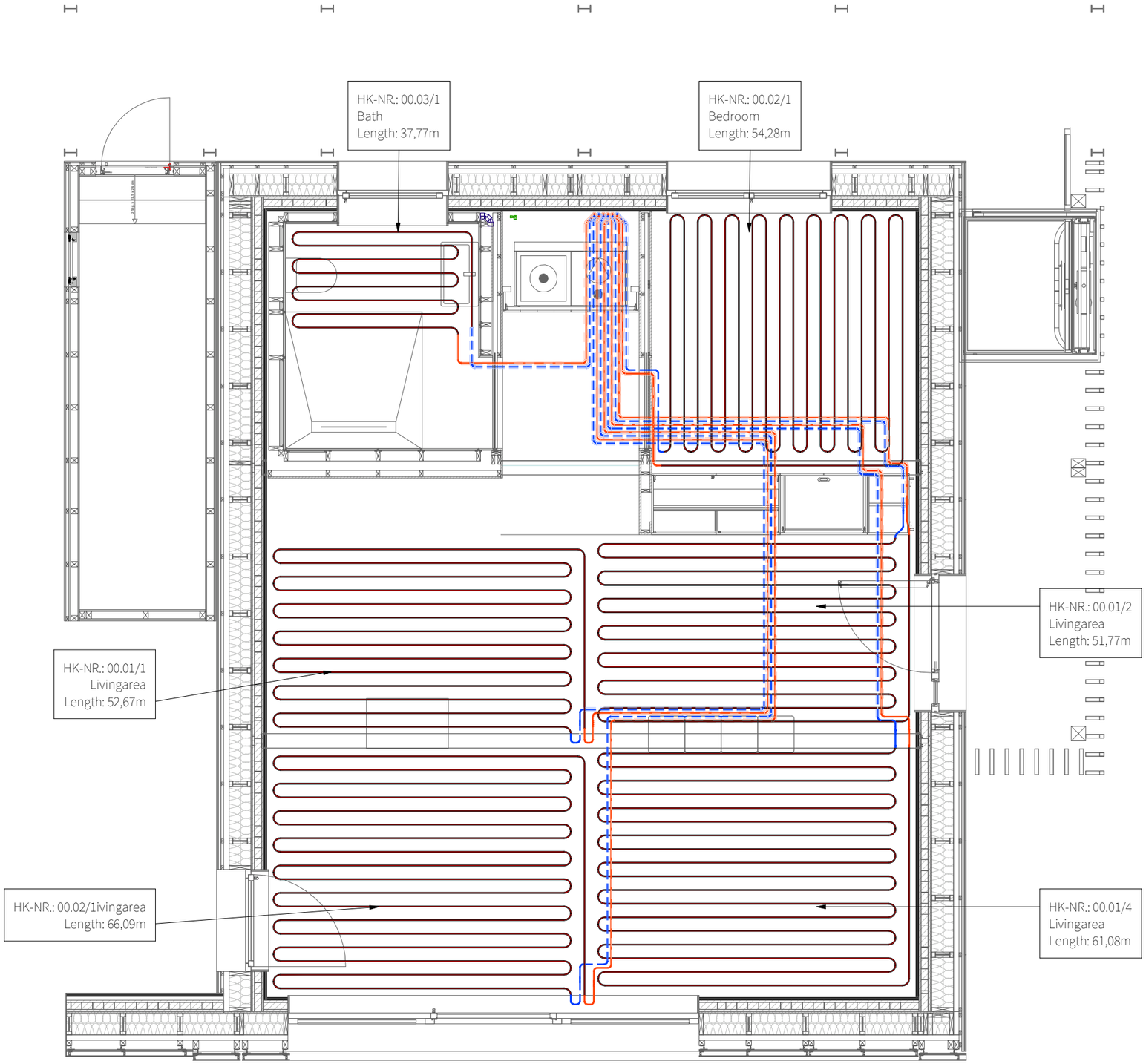

levelup

solar decathlon 21-22 europe
WUPPERTAL GERMANY

Scale
1 : 50

Phase
D#6

Drawing Content
Heating - Level01

ME-2001

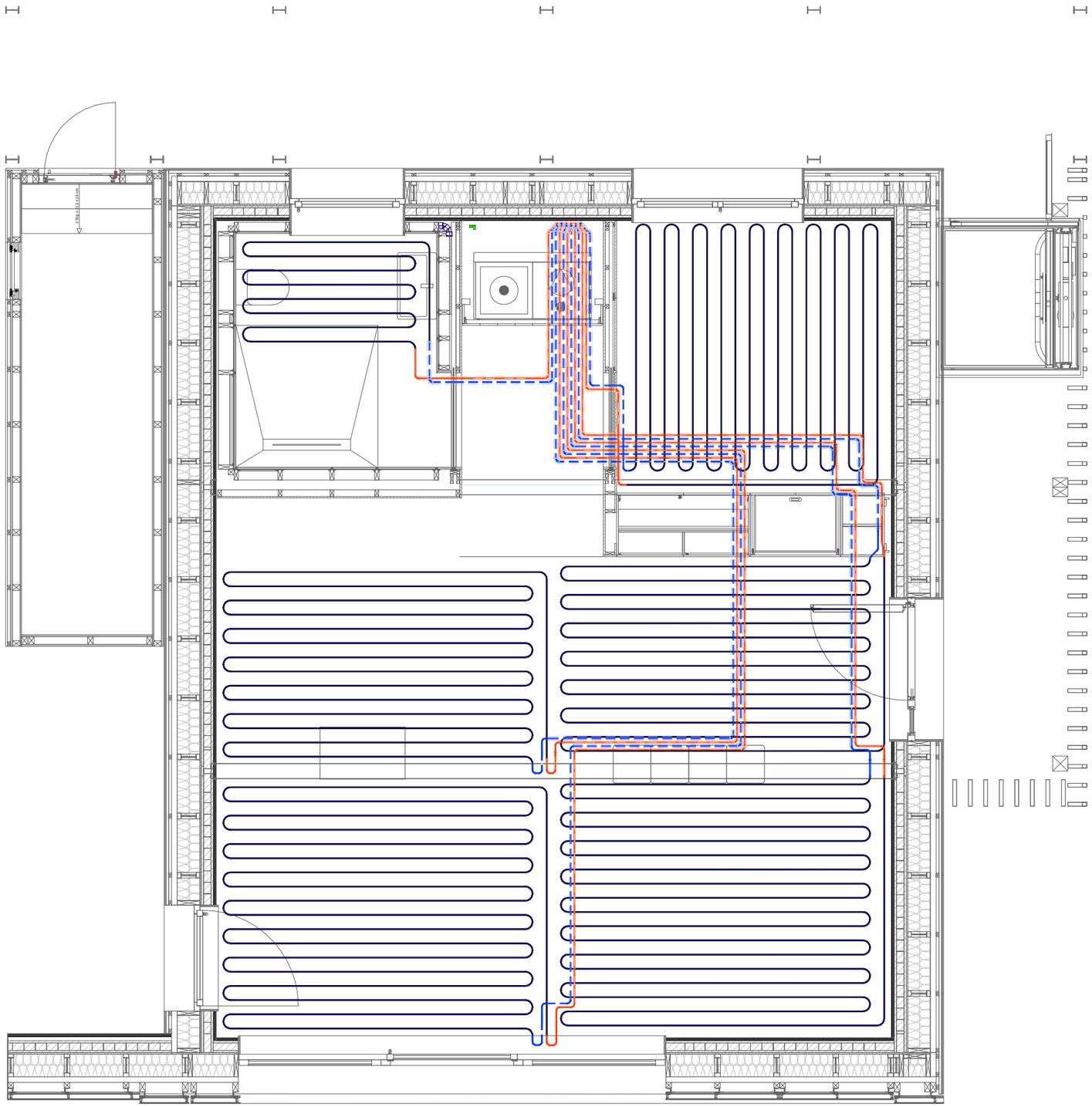

levelup

solar decathlon europe 21-22
WUPPERTAL GERMANY

Scale
1 : 50

Phase
D#6

Drawing Content
Cooling - Level 01

ME-2002

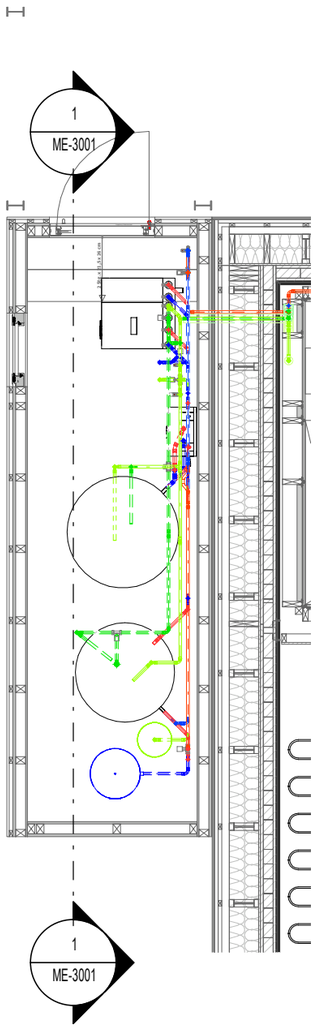

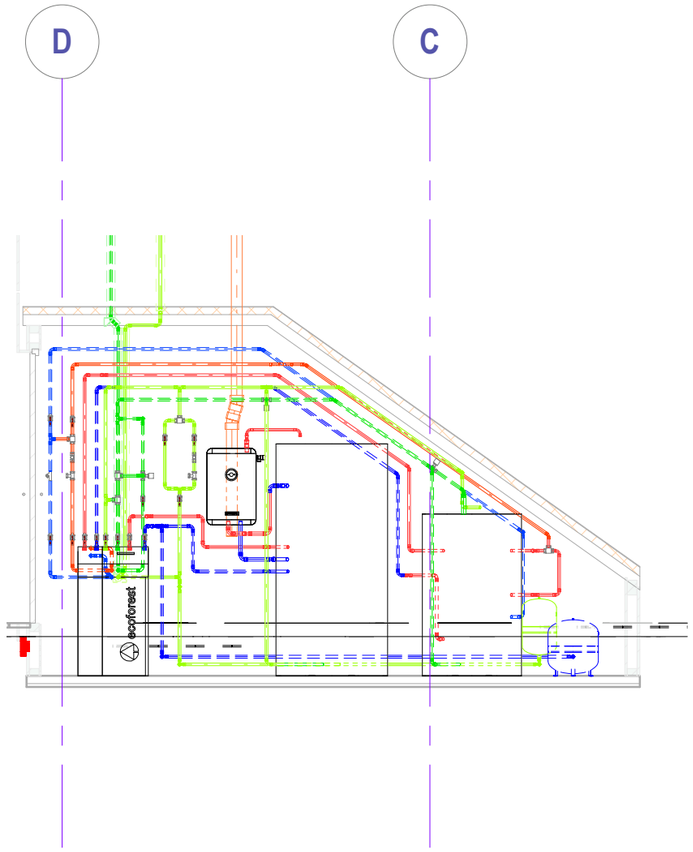

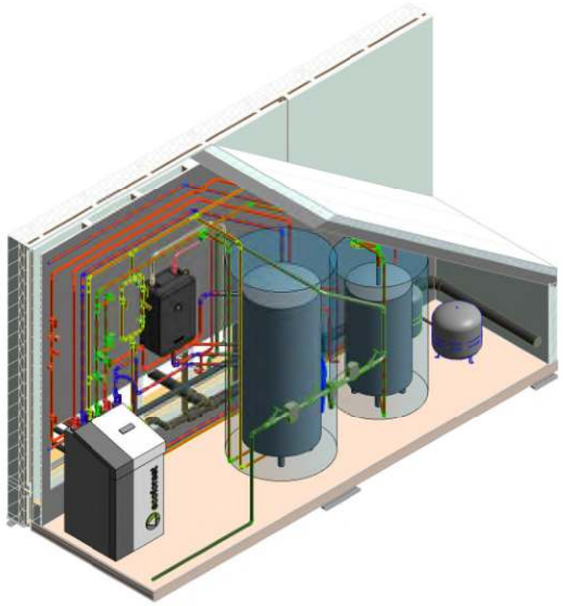

levelup

solar decathlon 21-22 europe
WUPPERTAL GERMANY

Scale
1 : 50

Phase
D#6

Drawing Content
Mechanical Room

ME-3001

	P	Pump / Pumpe
	Vb	Balancing valve / Strangregulierventil
	T	Temperature sensor / Temperaturfühler PT-1000
	Vm	Motorised valve / motorbetriebenes Ventil
	Vgb	Gravitiy brake (check valve) / Schwerkraftbremse (Rückschalgklappe)
	Vi	Isolation valve / Absperrventil
	Sv	Safety valve / Sicherheitsventil
	Vs	Switching valve / Umschaltventil
	M	Motorised mixing valve / motorbetriebenes Mischventil
	Dc	Dirt capture / Schmutzfang
	Va	Automatic air valve / Schnellentlüfter
	Vc	Cap block valve / Kappenventil
	Ds	Magnetite dirt seperator / magnetischer Schlammabscheider
	He	Heat exchanger / Wärmeübertrager
	ET	Expansion tank / Membran-Ausdehnungsgefäß
	C	Compressor / Verdichter
	Vex	Expansion valve / Expansionsventil
	Vkfe	Fill and drain valve / Kesselfüll- und entleerventil
	Ve	Energy valve / Energieventil Belimo EV025R2+MID

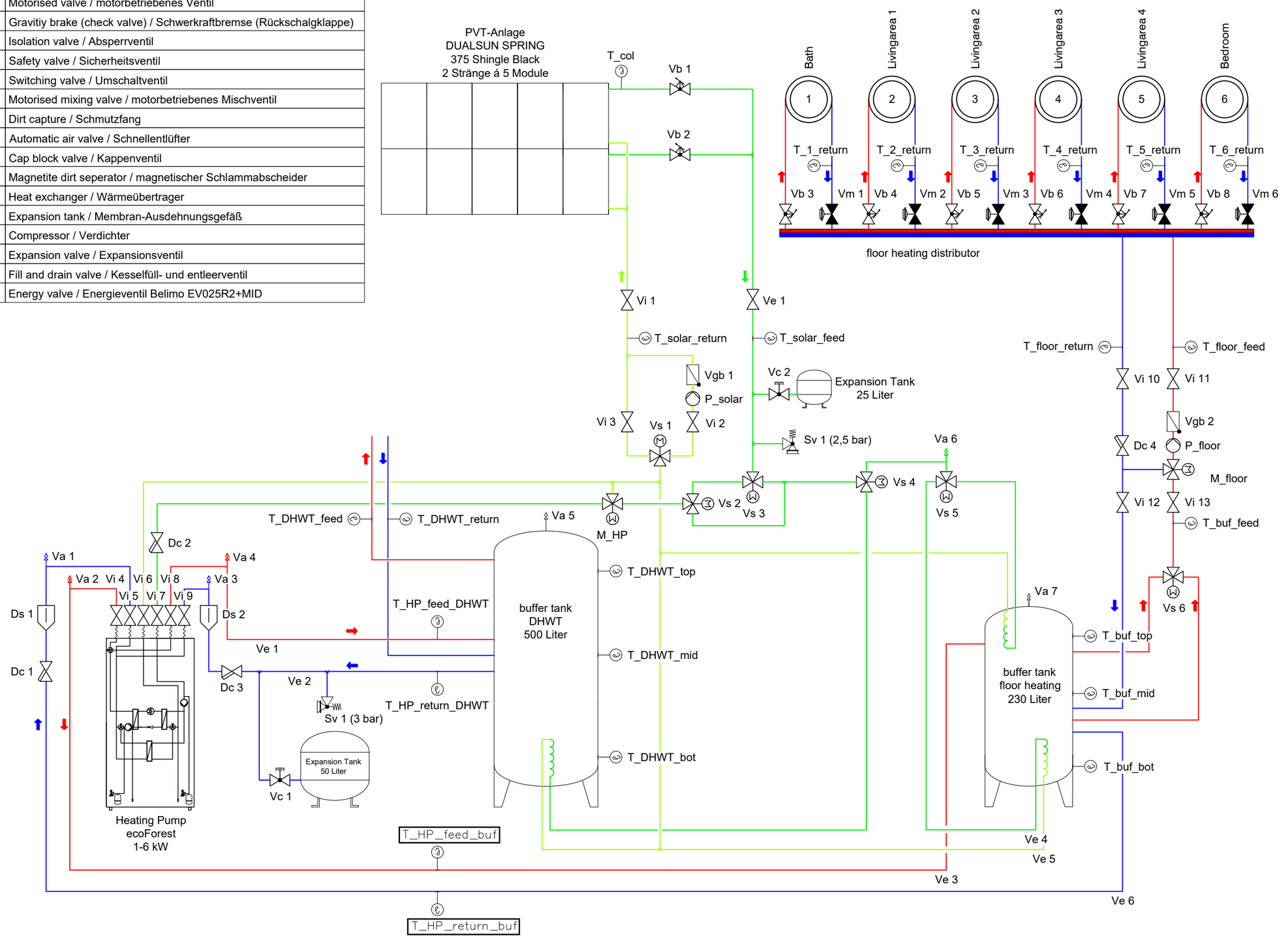

levelup

solar decathlon 21-22 europe
WUPPERTAL GERMANY

General	GE
Architecture	AR
Interiors	IN
Structural	ST
Plumbing	PL
Solar Water Heating	SW
Mechanical	**ME**
Electrical	EL
Photovoltaic System	PV
Teleco. & Build. Aut. System	BAS
Instrumentation Drawings	ID
Site Operations	SO
Fire Protection	FP
Health & Safety	HS
Public Tour	PT

heating feed
heating return
glycol feed
glycol return

Scale
n.t.s. (A3 420x297)

Phase
D#6

Drawing Content-HDU
Heating Cooling distribution
Schematic drawings

ME-4001

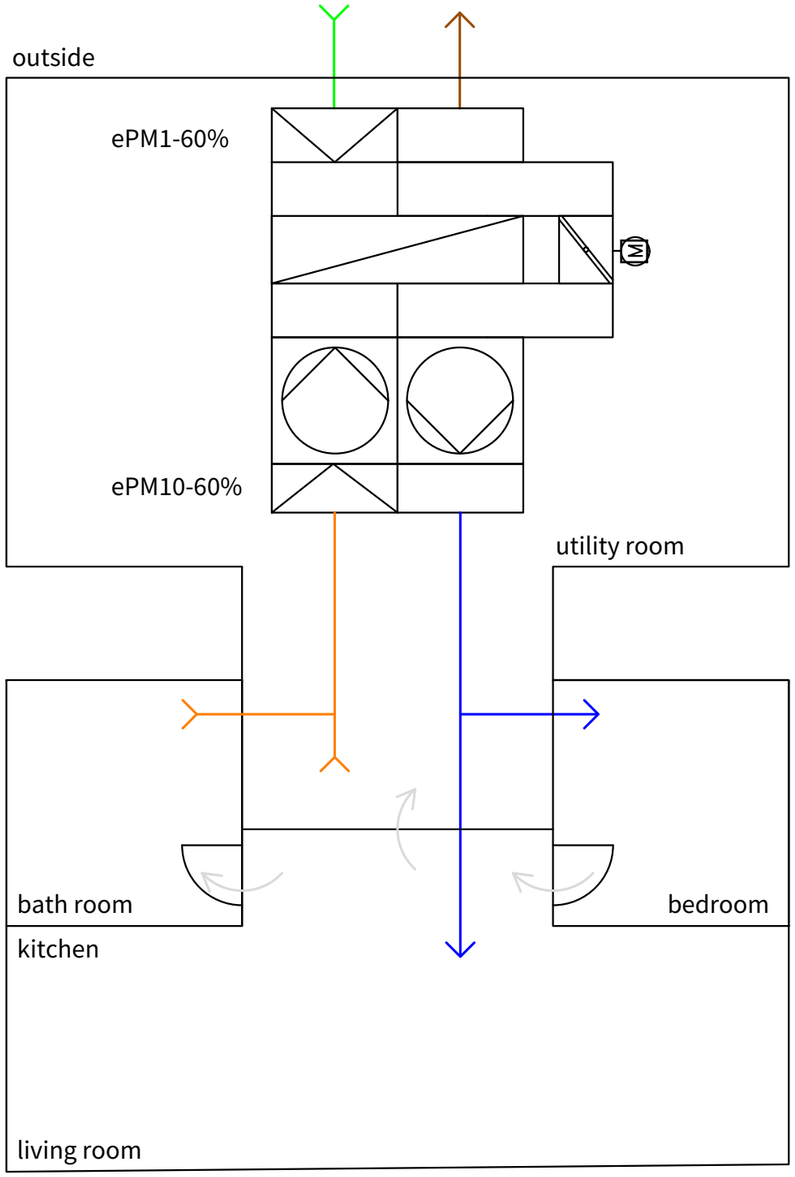

levelup

solar decathlon europe 21-22
WUPPERTAL GERMANY

General	GE
Architecture	AR
Interiors	IN
Structural	ST
Plumbing	PL
Solar Water Heating	SW
Mechanical	**ME**
Electrical	EL
Photovoltaic System	PV
Teleco. & Build. Aut. System	BAS
Instrumentation Drawings	ID
Site Operations	SO
Fire Protection	FP
Health & Safety	HS
Public Tour	PT

outdoor air
supply air
extract air
exhaust air
transferred air

filter
heat exchanger
motorized valve
fan
inlet valve
outlet valve

Scale
n.t.s. (A3 420x297)

Phase
D#6

Drawing Content-HDU
Ventilation distribution Schematic drawings

ME-4002

room heating

	P	Pump / Pumpe
	Vb	Balancing valve / Strangregulierventil
	T	Temperature sensor / Temperaturfühler PT-1000
	Vm	Motorised valve / motorbetriebenes Ventil
	Vgb	Gravitiy brake (check valve) / Schwerkraftbremse (Rückschalgklappe)
	Vi	Isolation valve / Absperrventil
	Sv	Safety valve / Sicherheitsventil
	Vs	Switching valve / Umschaltventil
	M	Motorised mixing valve / motorbetriebenes Mischventil
	Dc	Dirt capture / Schmutzfang
	Va	Automatic air valve / Schnellentlüfter
	Vc	Cap block valve / Kappenventil
	Ds	Magnetite dirt seperator / magnetischer Schlammabscheider
	He	Heat exchanger / Wärmeübertrager
	ET	Expansion tank / Membran-Ausdehnungsgefäß
	C	Compressor / Verdichter
	Vex	Expansion valve / Expansionsventil
	Vkfe	Fill and drain valve / Kesselfüll- und entleerventil
	Ve	Energy valve / Energieventil Belimo EV025R2+MID

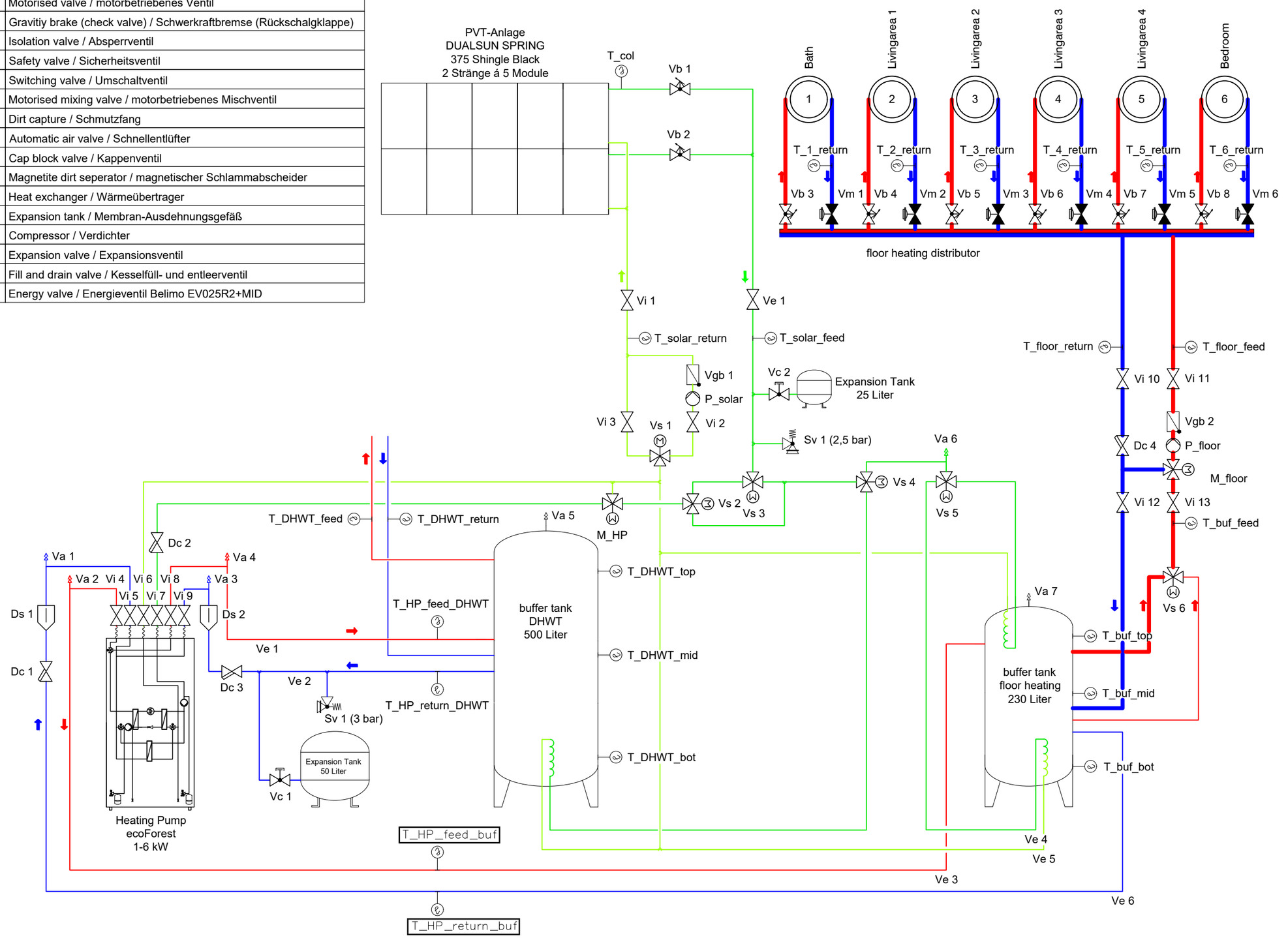

levelup

solar decathlon 21-22 europe
WUPPERTAL GERMANY

General	GE
Architecture	AR
Interiors	IN
Structural	ST
Plumbing	PL
Solar Water Heating	SW
Mechanical	**ME**
Electrical	EL
Photovoltaic System	PV
Teleco. & Build. Aut. System	BAS
Instrumentation Drawings	ID
Site Operations	SO
Fire Protection	FP
Health & Safety	HS
Public Tour	PT

heating feed
heating return
glycol feed
glycol return

Scale
n.t.s. (A3 420x297)

Phase
D#6

Drawing Content-HDU
Heating mode
Schematic drawings

ME-4101

room cooling

	P	Pump / Pumpe
	Vb	Balancing valve / Strangregulierventil
	T	Temperature sensor / Temperaturfühler PT-1000
	Vm	Motorised valve / motorbetriebenes Ventil
	Vgb	Gravitiy brake (check valve) / Schwerkraftbremse (Rückschalgklappe)
	Vi	Isolation valve / Absperrventil
	Sv	Safety valve / Sicherheitsventil
	Vs	Switching valve / Umschaltventil
	M	Motorised mixing valve / motorbetriebenes Mischventil
	Dc	Dirt capture / Schmutzfang
	Va	Automatic air valve / Schnellentlüfter
	Vc	Cap block valve / Kappenventil
	Ds	Magnetite dirt seperator / magnetischer Schlammabscheider
	He	Heat exchanger / Wärmeübertrager
	ET	Expansion tank / Membran-Ausdehnungsgefäß
	C	Compressor / Verdichter
	Vex	Expansion valve / Expansionsventil
	Vkfe	Fill and drain valve / Kesselfüll- und entleerventil
	Ve	Energy valve / Energieventil Belimo EV025R2+MID

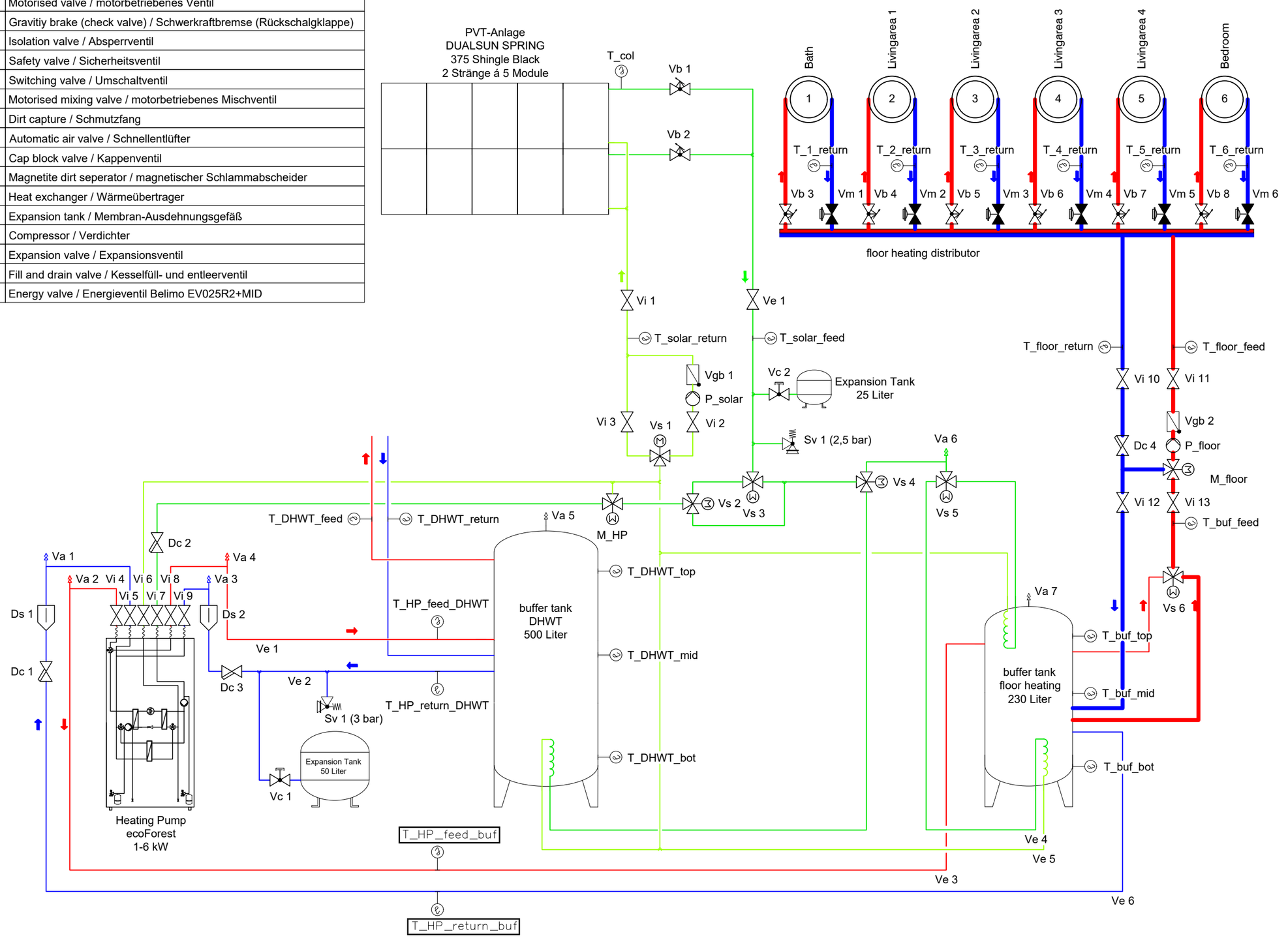

levelup

solar decathlon 21-22 europe
WUPPERTAL GERMANY

General	GE
Architecture	AR
Interiors	IN
Structural	ST
Plumbing	PL
Solar Water Heating	SW
Mechanical	**ME**
Electrical	EL
Photovoltaic System	PV
Teleco. & Build. Aut. System	BAS
Instrumentation Drawings	ID
Site Operations	SO
Fire Protection	FP
Health & Safety	HS
Public Tour	PT

heating feed
heating return
glycol feed
glycol return

Scale
n.t.s. (A3 420x297)

Phase
D#6

Drawing Content-HDU
Heating mode
Schematic drawings

ME-4102

loading of buffer tank via PVT heating

	P	Pump / Pumpe
	Vb	Balancing valve / Strangregulierventil
	T	Temperature sensor / Temperaturfühler PT-1000
	Vm	Motorised valve / motorbetriebenes Ventil
	Vgb	Gravitiy brake (check valve) / Schwerkraftbremse (Rückschalgklappe)
	Vi	Isolation valve / Absperrventil
	Sv	Safety valve / Sicherheitsventil
	Vs	Switching valve / Umschaltventil
	M	Motorised mixing valve / motorbetriebenes Mischventil
	Dc	Dirt capture / Schmutzfang
	Va	Automatic air valve / Schnellentlüfter
	Vc	Cap block valve / Kappenventil
	Ds	Magnetite dirt seperator / magnetischer Schlammabscheider
	He	Heat exchanger / Wärmeübertrager
	ET	Expansion tank / Membran-Ausdehnungsgefäß
	C	Compressor / Verdichter
	Vex	Expansion valve / Expansionsventil
	Vkfe	Fill and drain valve / Kesselfüll- und entleerventil
	Ve	Energy valve / Energieventil Belimo EV025R2+MID

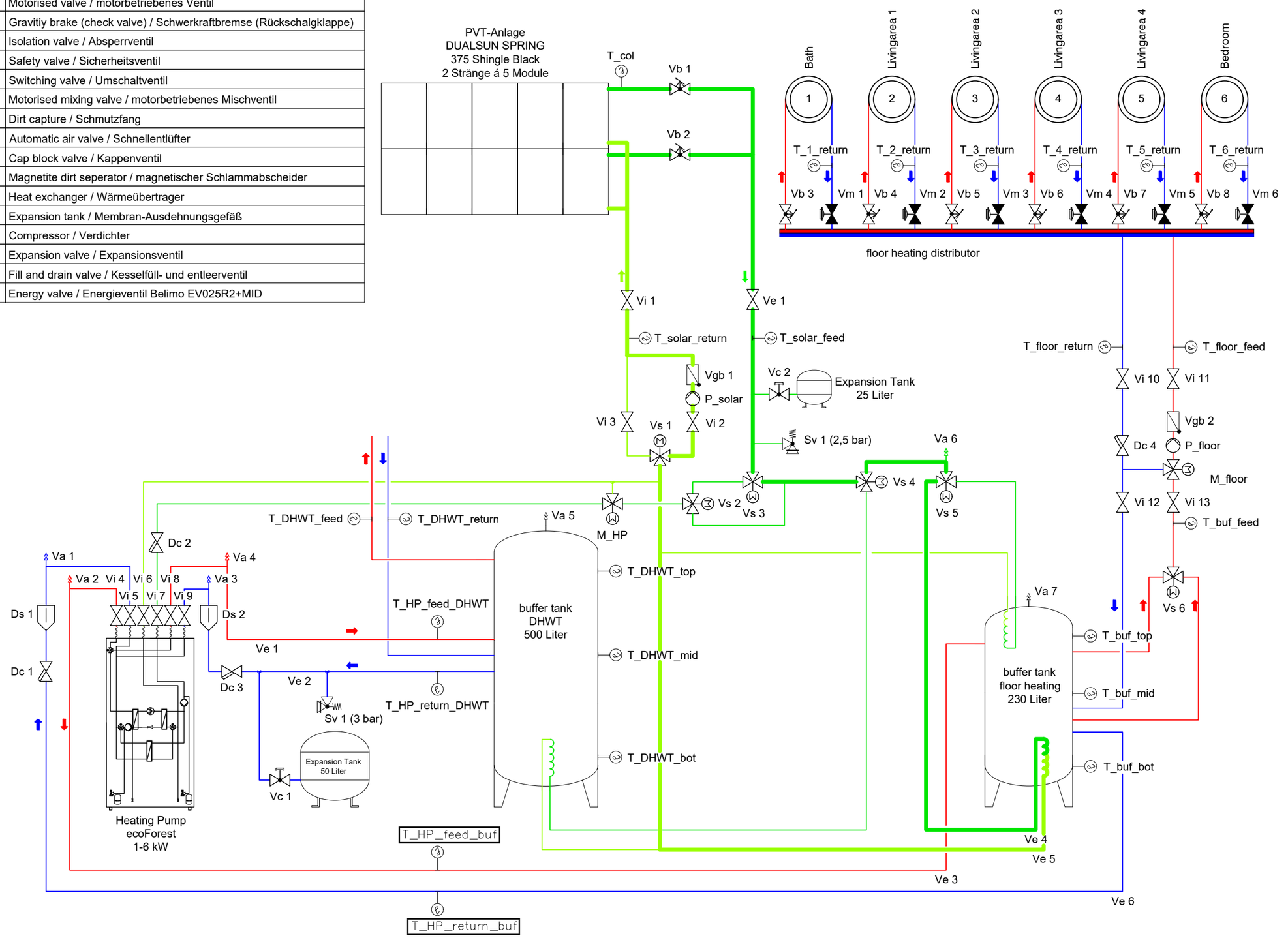

levelup

solar decathlon 21-22 europe
WUPPERTAL GERMANY

General	GE
Architecture	AR
Interiors	IN
Structural	ST
Plumbing	PL
Solar Water Heating	SW
Mechanical	**ME**
Electrical	EL
Photovoltaic System	PV
Teleco. & Build. Aut. System	BAS
Instrumentation Drawings	ID
Site Operations	SO
Fire Protection	FP
Health & Safety	HS
Public Tour	PT

heating feed
heating return
glycol feed
glycol return

Scale
n.t.s. (A3 420x297)

Phase
D#6

Drawing Content-HDU
Heating mode
Schematic drawings

ME-4103

loading of buffer tank via PVT cooling

	P	Pump / Pumpe
	Vb	Balancing valve / Strangregulierventil
	T	Temperature sensor / Temperaturfühler PT-1000
	Vm	Motorised valve / motorbetriebenes Ventil
	Vgb	Gravitiy brake (check valve) / Schwerkraftbremse (Rückschalgklappe)
	Vi	Isolation valve / Absperrventil
	Sv	Safety valve / Sicherheitsventil
	Vs	Switching valve / Umschaltventil
	M	Motorised mixing valve / motorbetriebenes Mischventil
	Dc	Dirt capture / Schmutzfang
	Va	Automatic air valve / Schnellentlüfter
	Vc	Cap block valve / Kappenventil
	Ds	Magnetite dirt seperator / magnetischer Schlammabscheider
	He	Heat exchanger / Wärmeübertrager
	ET	Expansion tank / Membran-Ausdehnungsgefäß
	C	Compressor / Verdichter
	Vex	Expansion valve / Expansionsventil
	Vkfe	Fill and drain valve / Kesselfüll- und entleerventil
	Ve	Energy valve / Energieventil Belimo EV025R2+MID

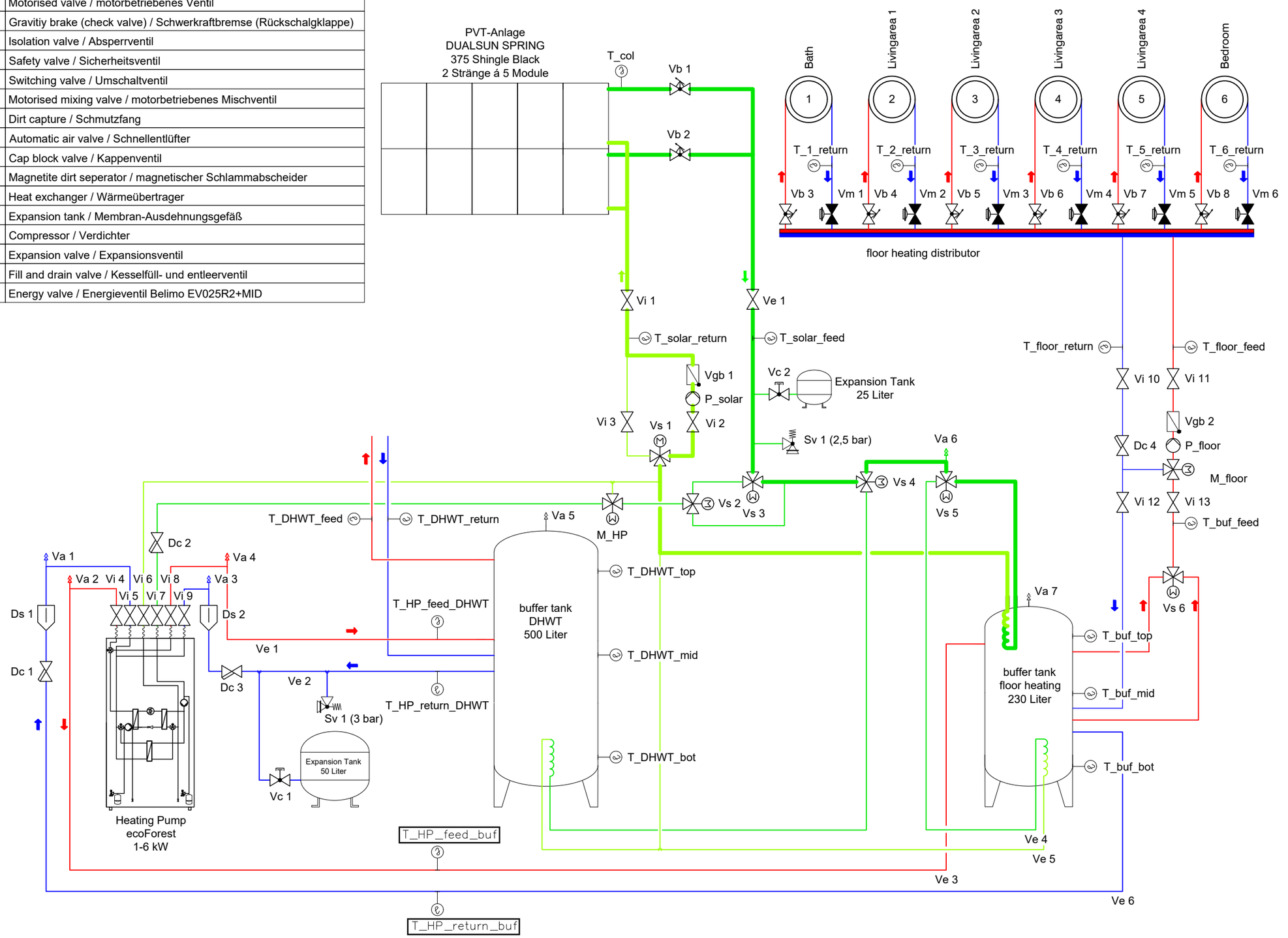

levelup

solar decathlon 21-22 europe
WUPPERTAL GERMANY

General	GE
Architecture	AR
Interiors	IN
Structural	ST
Plumbing	PL
Solar Water Heating	SW
Mechanical	**ME**
Electrical	EL
Photovoltaic System	PV
Teleco. & Build. Aut. System	BAS
Instrumentation Drawings	ID
Site Operations	SO
Fire Protection	FP
Health & Safety	HS
Public Tour	PT

heating feed
heating return
glycol feed
glycol return

Scale
n.t.s. (A3 420x297)

Phase
D#6

Drawing Content-HDU
Heating mode
Schematic drawings

ME-4104

loading of buffer tank via heat pump heating & cooling

	P	Pump / Pumpe
	Vb	Balancing valve / Strangregulierventil
	T	Temperature sensor / Temperaturfühler PT-1000
	Vm	Motorised valve / motorbetriebenes Ventil
	Vgb	Gravitiy brake (check valve) / Schwerkraftbremse (Rückschalgklappe)
	Vi	Isolation valve / Absperrventil
	Sv	Safety valve / Sicherheitsventil
	Vs	Switching valve / Umschaltventil
	M	Motorised mixing valve / motorbetriebenes Mischventil
	Dc	Dirt capture / Schmutzfang
	Va	Automatic air valve / Schnellentlüfter
	Vc	Cap block valve / Kappenventil
	Ds	Magnetite dirt seperator / magnetischer Schlammabscheider
	He	Heat exchanger / Wärmeübertrager
	ET	Expansion tank / Membran-Ausdehnungsgefäß
	C	Compressor / Verdichter
	Vex	Expansion valve / Expansionsventil
	Vkfe	Fill and drain valve / Kesselfüll- und entleerventil
	Ve	Energy valve / Energieventil Belimo EV025R2+MID

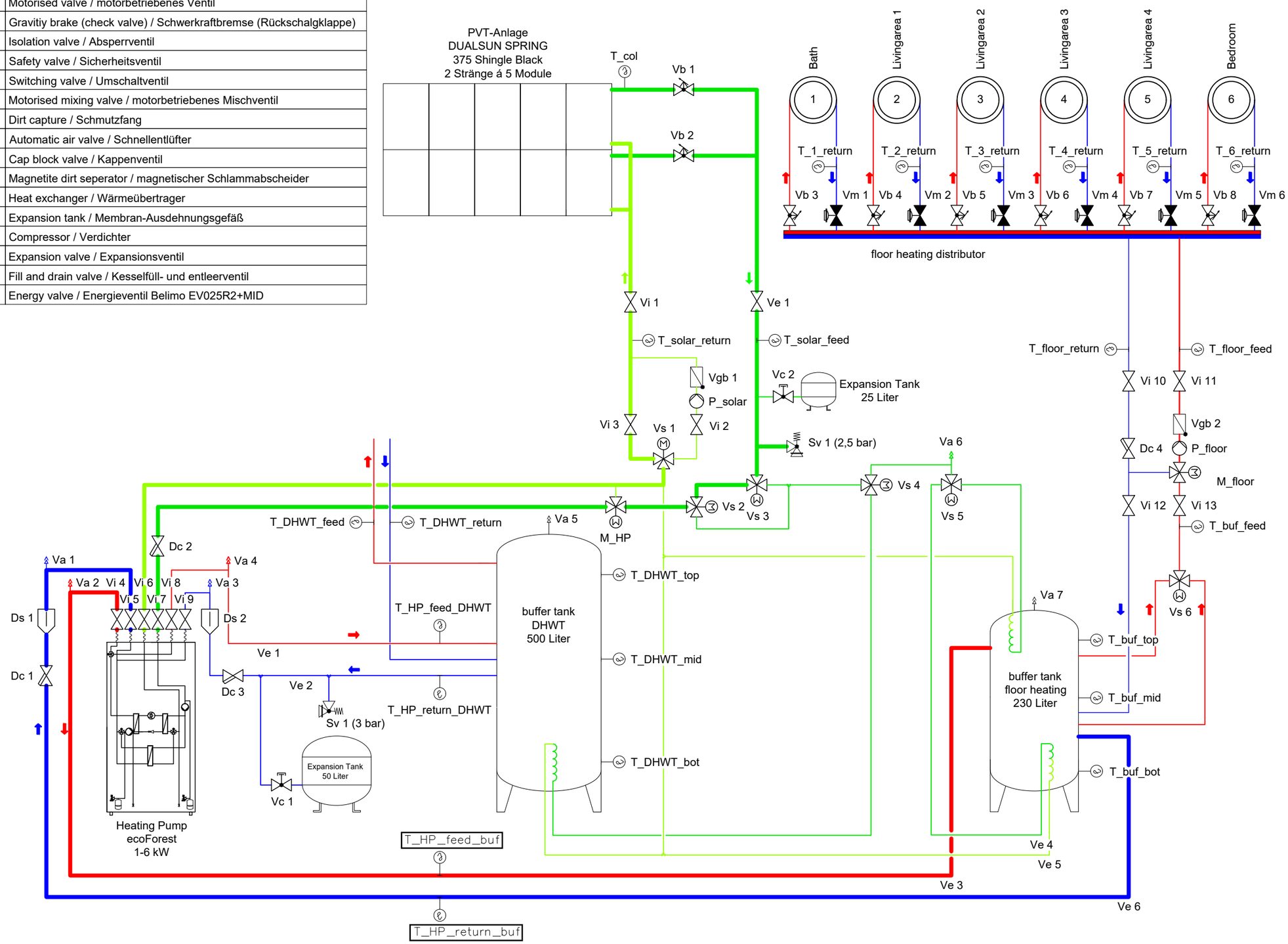

levelup

solar decathlon 21-22 europe
WUPPERTAL GERMANY

General	GE
Architecture	AR
Interiors	IN
Structural	ST
Plumbing	PL
Solar Water Heating	SW
Mechanical	**ME**
Electrical	EL
Photovoltaic System	PV
Teleco. & Build. Aut. System	BAS
Instrumentation Drawings	ID
Site Operations	SO
Fire Protection	FP
Health & Safety	HS
Public Tour	PT

heating feed
heating return
glycol feed
glycol return

Scale
n.t.s. (A3 420x297)

Phase
D#6

Drawing Content-HDU
Heating mode
Schematic drawings

ME-4105

loading of DHW tank via PVT

	P	Pump / Pumpe
	Vb	Balancing valve / Strangregulierventil
	T	Temperature sensor / Temperaturfühler PT-1000
	Vm	Motorised valve / motorbetriebenes Ventil
	Vgb	Gravitiy brake (check valve) / Schwerkraftbremse (Rückschalgklappe)
	Vi	Isolation valve / Absperrventil
	Sv	Safety valve / Sicherheitsventil
	Vs	Switching valve / Umschaltventil
	M	Motorised mixing valve / motorbetriebenes Mischventil
	Dc	Dirt capture / Schmutzfang
	Va	Automatic air valve / Schnellentlüfter
	Vc	Cap block valve / Kappenventil
	Ds	Magnetite dirt seperator / magnetischer Schlammabscheider
	He	Heat exchanger / Wärmeübertrager
	ET	Expansion tank / Membran-Ausdehnungsgefäß
	C	Compressor / Verdichter
	Vex	Expansion valve / Expansionsventil
	Vkfe	Fill and drain valve / Kesselfüll- und entleerventil
	Ve	Energy valve / Energieventil Belimo EV025R2+MID

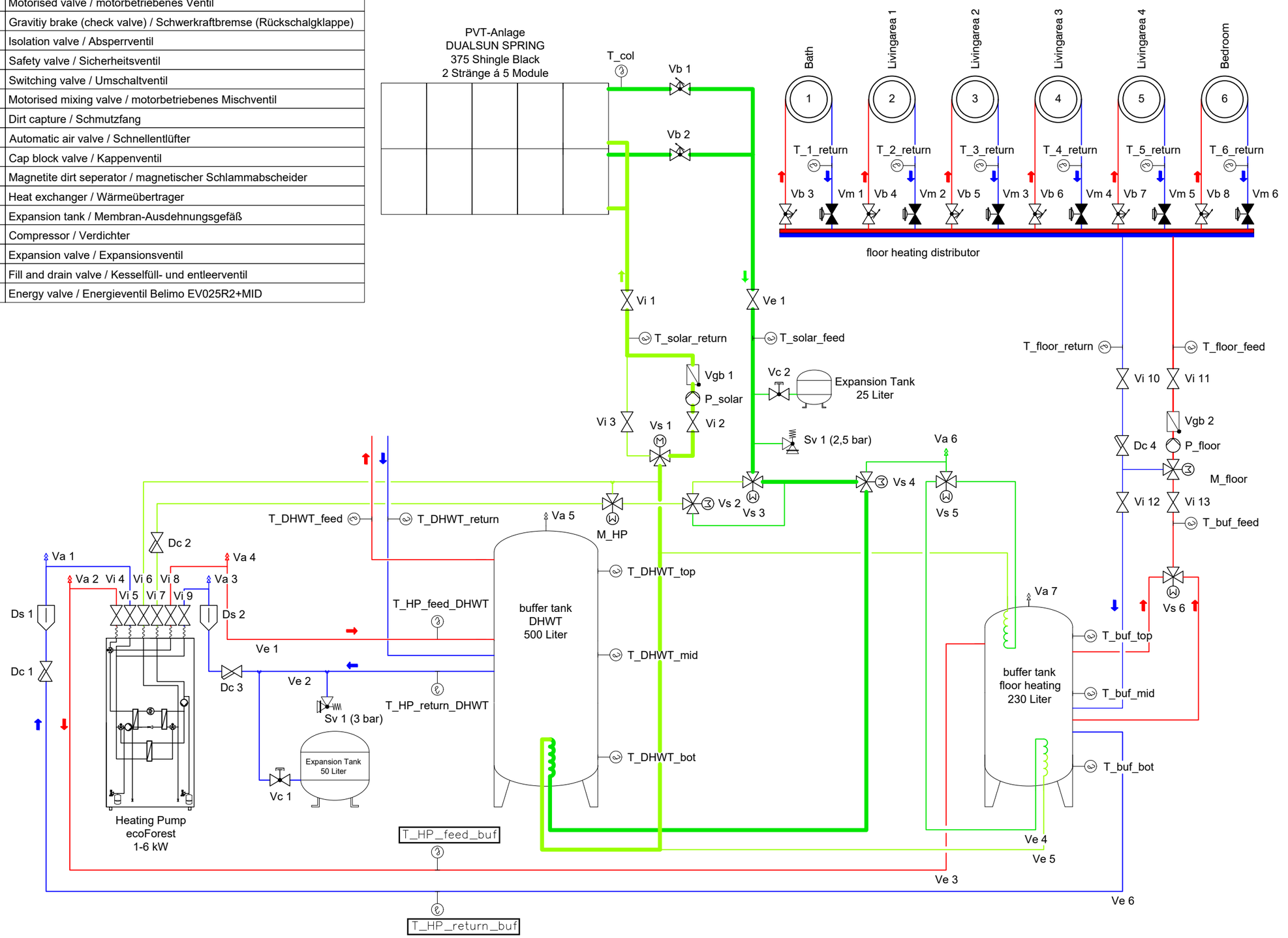

levelup

solar decathlon 21-22 europe
WUPPERTAL GERMANY

General	GE
Architecture	AR
Interiors	IN
Structural	ST
Plumbing	PL
Solar Water Heating	SW
Mechanical	**ME**
Electrical	EL
Photovoltaic System	PV
Teleco. & Build. Aut. System	BAS
Instrumentation Drawings	ID
Site Operations	SO
Fire Protection	FP
Health & Safety	HS
Public Tour	PT

heating feed
heating return
glycol feed
glycol return

Scale
n.t.s. (A3 420x297)

Phase
D#6

Drawing Content-HDU
Heating mode
Schematic drawings

ME-4106

loading of DHW tank via heat pump source PVT

	P	Pump / Pumpe
	Vb	Balancing valve / Strangregulierventil
	T	Temperature sensor / Temperaturfühler PT-1000
	Vm	Motorised valve / motorbetriebenes Ventil
	Vgb	Gravitiy brake (check valve) / Schwerkraftbremse (Rückschalgklappe)
	Vi	Isolation valve / Absperrventil
	Sv	Safety valve / Sicherheitsventil
	Vs	Switching valve / Umschaltventil
	M	Motorised mixing valve / motorbetriebenes Mischventil
	Dc	Dirt capture / Schmutzfang
	Va	Automatic air valve / Schnellentlüfter
	Vc	Cap block valve / Kappenventil
	Ds	Magnetite dirt seperator / magnetischer Schlammabscheider
	He	Heat exchanger / Wärmeübertrager
	ET	Expansion tank / Membran-Ausdehnungsgefäß
	C	Compressor / Verdichter
	Vex	Expansion valve / Expansionsventil
	Vkfe	Fill and drain valve / Kesselfüll- und entleerventil
	Ve	Energy valve / Energieventil Belimo EV025R2+MID

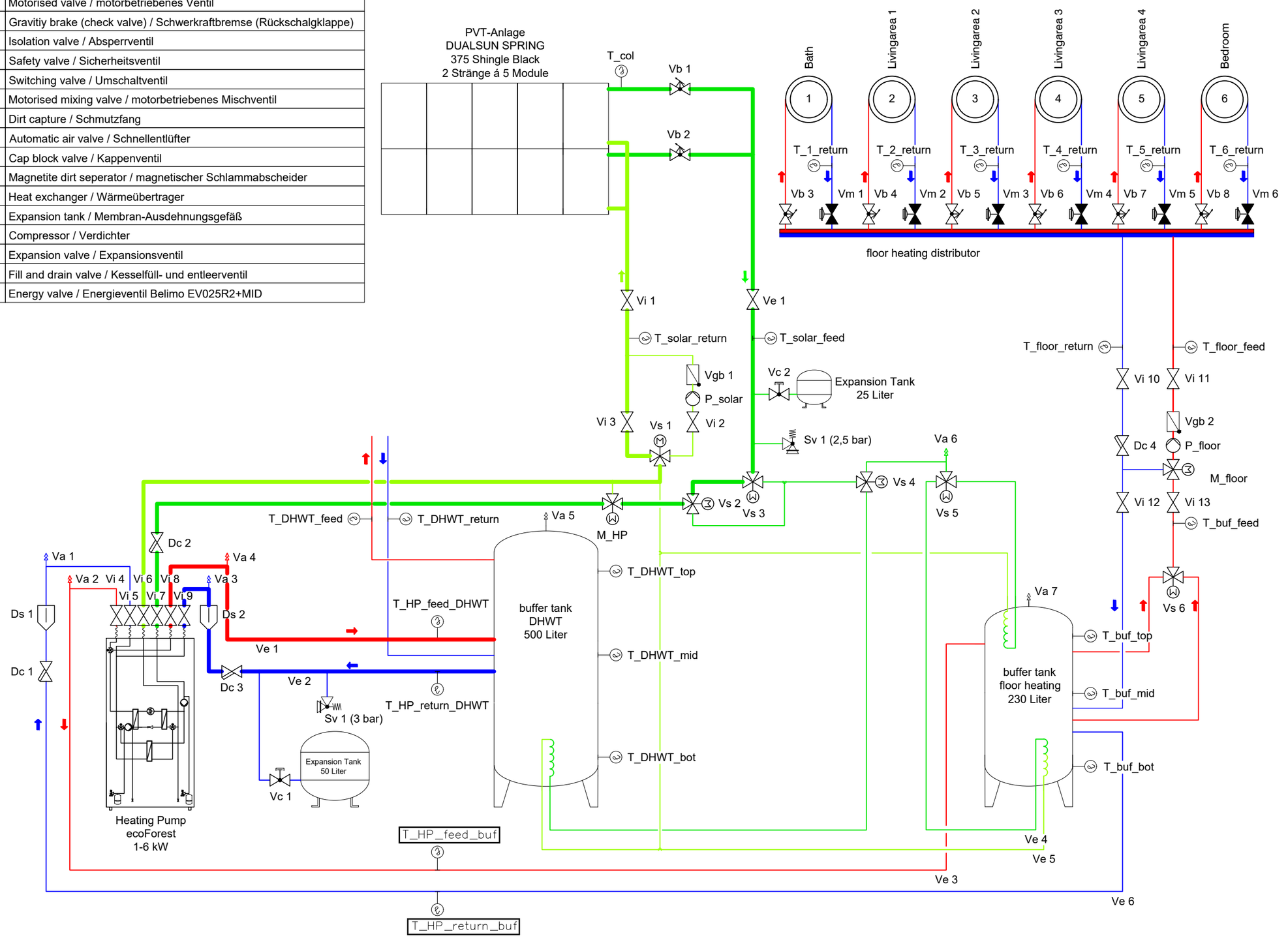

levelup

solar decathlon 21-22 europe
WUPPERTAL GERMANY

General	GE
Architecture	AR
Interiors	IN
Structural	ST
Plumbing	PL
Solar Water Heating	SW
Mechanical	**ME**
Electrical	EL
Photovoltaic System	PV
Teleco. & Build. Aut. System	BAS
Instrumentation Drawings	ID
Site Operations	SO
Fire Protection	FP
Health & Safety	HS
Public Tour	PT

heating feed
heating return
glycol feed
glycol return

Scale
n.t.s. (A3 420x297)

Phase
D#6

Drawing Content-HDU
Heating mode
Schematic drawings

ME-4107

loading of DHW tank via heat pump source buffer tank

	P	Pump / Pumpe
	Vb	Balancing valve / Strangregulierventil
	T	Temperature sensor / Temperaturfühler PT-1000
	Vm	Motorised valve / motorbetriebenes Ventil
	Vgb	Gravitiy brake (check valve) / Schwerkraftbremse (Rückschalgklappe)
	Vi	Isolation valve / Absperrventil
	Sv	Safety valve / Sicherheitsventil
	Vs	Switching valve / Umschaltventil
	M	Motorised mixing valve / motorbetriebenes Mischventil
	Dc	Dirt capture / Schmutzfang
	Va	Automatic air valve / Schnellentlüfter
	Vc	Cap block valve / Kappenventil
	Ds	Magnetite dirt seperator / magnetischer Schlammabscheider
	He	Heat exchanger / Wärmeübertrager
	ET	Expansion tank / Membran-Ausdehnungsgefäß
	C	Compressor / Verdichter
	Vex	Expansion valve / Expansionsventil
	Vkfe	Fill and drain valve / Kesselfüll- und entleerventil
	Ve	Energy valve / Energieventil Belimo EV025R2+MID

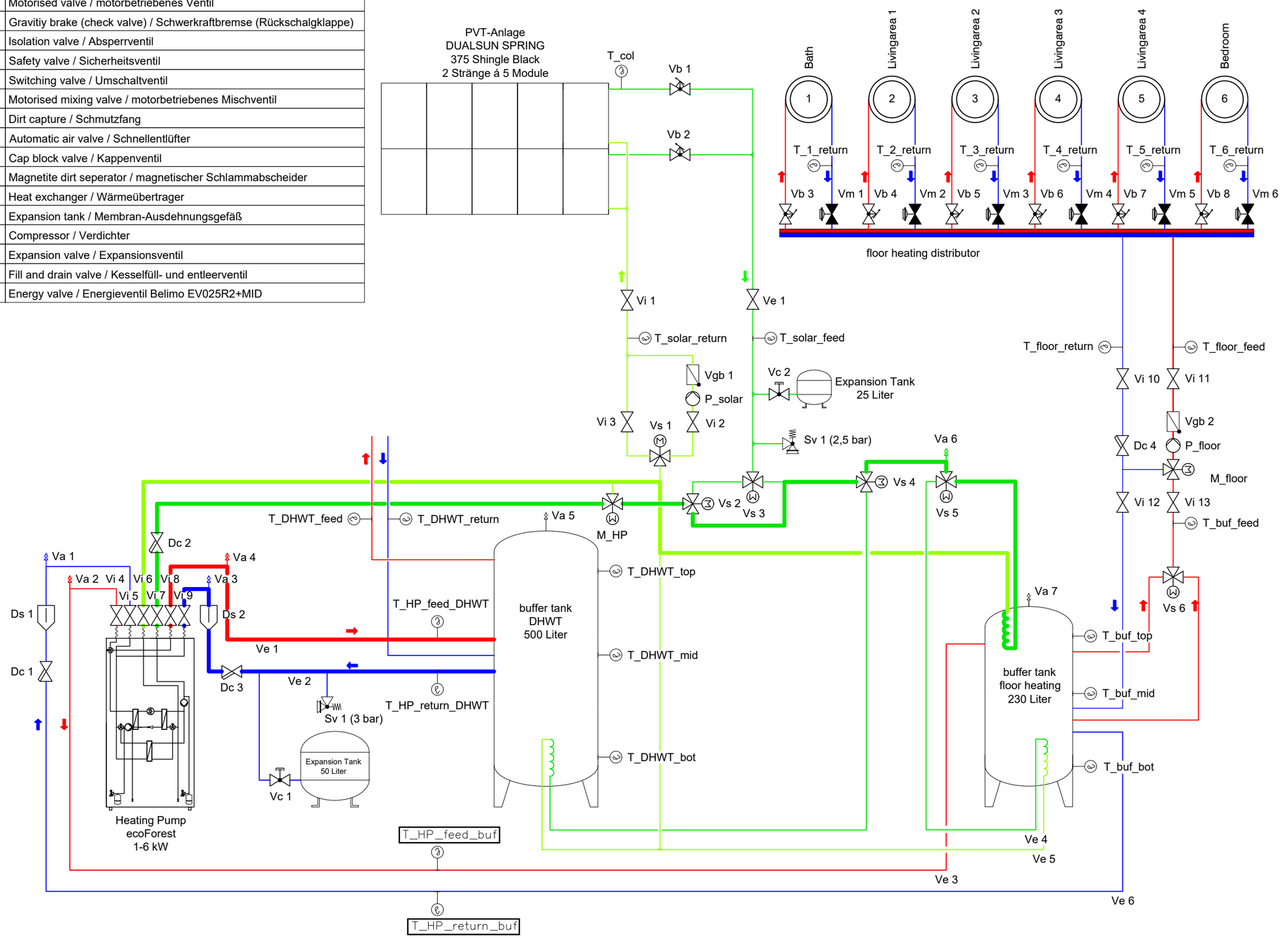

levelup

solar decathlon 21-22 europe
WUPPERTAL GERMANY

General	GE
Architecture	AR
Interiors	IN
Structural	ST
Plumbing	PL
Solar Water Heating	SW
Mechanical	**ME**
Electrical	EL
Photovoltaic System	PV
Teleco. & Build. Aut. System	BAS
Instrumentation Drawings	ID
Site Operations	SO
Fire Protection	FP
Health & Safety	HS
Public Tour	PT

heating feed
heating return
glycol feed
glycol return

Scale
n.t.s. (A3 420x297)

Phase
D#6

Drawing Content-HDU
Heating mode
Schematic drawings

ME-4108

processing of DHW

	P	Pump / Pumpe
	Vb	Balancing valve / Strangregulierventil
	T	Temperature sensor / Temperaturfühler PT-1000
	Vm	Motorised valve / motorbetriebenes Ventil
	Vgb	Gravitiy brake (check valve) / Schwerkraftbremse (Rückschalgklappe)
	Vi	Isolation valve / Absperrventil
	Sv	Safety valve / Sicherheitsventil
	Vs	Switching valve / Umschaltventil
	M	Motorised mixing valve / motorbetriebenes Mischventil
	Dc	Dirt capture / Schmutzfang
	Va	Automatic air valve / Schnellentlüfter
	Vc	Cap block valve / Kappenventil
	Ds	Magnetite dirt seperator / magnetischer Schlammabscheider
	He	Heat exchanger / Wärmeübertrager
	ET	Expansion tank / Membran-Ausdehnungsgefäß
	C	Compressor / Verdichter
	Vex	Expansion valve / Expansionsventil
	Vkfe	Fill and drain valve / Kesselfüll- und entleerventil
	Ve	Energy valve / Energieventil Belimo EV025R2+MID

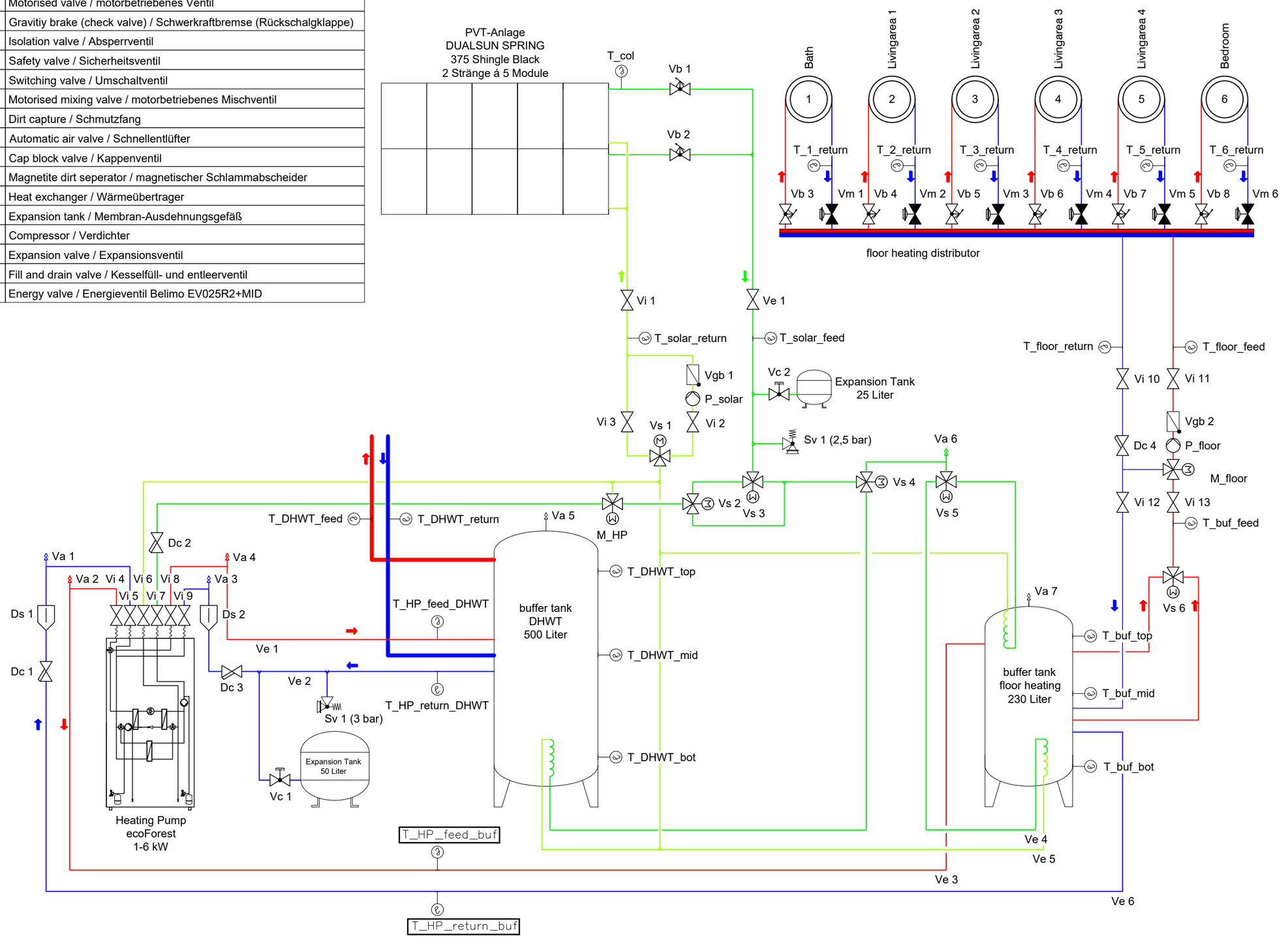

levelup

solar decathlon 21-22 europe
WUPPERTAL GERMANY

General	GE
Architecture	AR
Interiors	IN
Structural	ST
Plumbing	PL
Solar Water Heating	SW
Mechanical	**ME**
Electrical	EL
Photovoltaic System	PV
Teleco. & Build. Aut. System	BAS
Instrumentation Drawings	ID
Site Operations	SO
Fire Protection	FP
Health & Safety	HS
Public Tour	PT

heating feed
heating return
glycol feed
glycol return

Scale
n.t.s. (A3 420x297)

Phase
D#6

Drawing Content-HDU
Heating mode
Schematic drawings

ME-4109

roomheating - and cooling			
		heating	cooling
	switch on condition	T_room_real < T_room_set - hyst & T_amb_avg_rol < T_heat_lim	T_room_real > T_room_set + hyst & T_amb_avg_rol > T_cool_lim
	switch off condtion	T_room_real > T_room_set + hyst	T_room_real < T_room_set - hyst
P_floor		ON	ON
M_floor	x = position in %	x = 0 < (T_room_set - T_room_real)*100 < 100	x = 0 < (T_room_real - T_room_set)*100 < 100
V 6		A	B

loading of domestic hot water tank				
		heating (PVT)	heating (HP [source:PVT])	heating (HP [source: buffer])
	switch on condition	T_col > T_DHWT_bot + hyst	T_DHWT_top_real < T_DHWT_top_set & P_solar = OFF	T_col < T_buffer_top - hyst T_DHWT_top_real < T_DHWT_top_set & T_amb_avg_rol > T_cool_lim & P_solar = OFF
	switch off condtion	T_col < T_DHWT_bot	T_DHWT_top_real > T_DHWT_top_set + hyst	T_DHWT_top_real > T_DHWT_top_set + hyst
P_solar	x = speed in %	x = 0 < (T_col - T_DHWT_bot)*10 < 100	OFF	OFF
M_HP	x = position in %	0	x =0 < (T_HP_prim_RF_max - T_HP_prim_RF_real)*100 < 100	x =0 < (T_HP_prim_RF_max - T_HP_prim_RF_real)*100 < 100
HP		OFF	ON	ON
V 1		B	A	not used
V 2		A	A	B
V 3		A	B	not used
V 4		B	X	A
V 5		not used	not used	A

switching valve
mode A

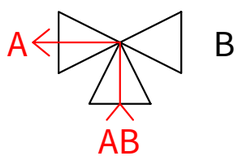

switching valve
mode B

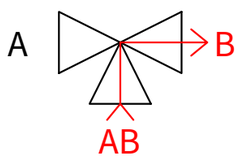

mixing valve
position 0%

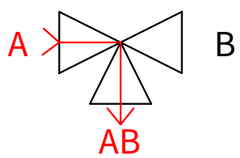

mixing valve
position 100%

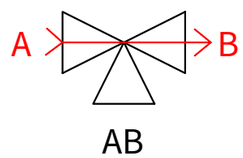

levelup

solar decathlon 21-22 europe
WUPPERTAL GERMANY

T	Temperature
room	room
amb	ambient
buf	buffertank
col	collector
DHWT	domestic hot water tank
RF	return flow
heat	heating
cool	cooling
top	top
mid	middle
bot	bottom
prim	primary
set	setpoint
real	measured / real value
lim	limit
avg	average
rol	rolling
max	maximum
P_xxx	pump
M_xxx	mixing valve
HP	heat pump
V x	switching valve number

Scale
n.t.s. (A3 420x297)

Phase
D#6

Drawing Content-HDU
Controls

ME-5001

loading of buffer tank from PVT			
		heating (PVT)	cooling (PVT)
	switch on condition	T_col > T_buf_bot + hyst & T_amb_avg_rol < T_heat_lim & PVT --> DHWT = OFF	T_col < T_buf_top - hyst & T_amb_avg_rol > T_cool_lim & PVT --> HP = OFF
	switch off condtion	T_col < T_buf_bot	T_col > T_buf_bot
P_solar	x = speed in %	x = 0 < (T_col - T_buf_bot)*10 < 100	x = 0 < (T_buf_oben-T_kol)*10 < 100
M_HP	x = position in %	0	0
HP		OFF	OFF
V 1		B	B
V 2		A	A
V 3		A	A
V 4		A	A
V 5		B	A

loading of buffer tank from heating pump			
		heating (HP)	cooling (HP)
	switch on condition	T_buf_top_real < T_buf_top_set & T_amb_avg_rol < T_heat_lim	T_buf_bot_real > T_buf_bot_set & T_amb_avg_rol > T_cool_lim
	switch off condtion	T_buf_top_real > T_buf_top_set + hyst	T_buf_bot_real < T_buf_bot_set - hyst
P_solar	x = speed in %	OFF	OFF
M_HP	x = position in %	x =0 < (T_HP_prim_RF_max - T_HP_prim_RF_real)*100 < 100	x =0 < (T_HP_prim_RF_max - T_HP_prim_RF_real)*100 < 100
HP		ON	ON
Vs 1		A	A
Vs 2		A	A
Vs 3		B	B
Vs 4		not used	not used
Vs 5		not used	not used

switching valve mode A

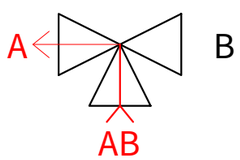

switching valve mode B

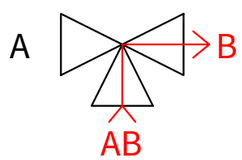

mixing valve position 0%

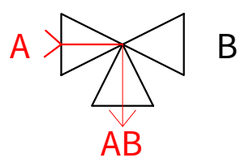

mixing valve position 100%

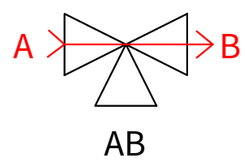

levelup

solar decathlon 21-22 europe
WUPPERTAL GERMANY

T	Temperature
room	room
amb	ambient
buf	buffertank
col	collector
DHWT	domestic hot water tank
RF	return flow
heat	heating
cool	cooling
top	top
mid	middle
bot	bottom
prim	primary
set	setpoint
real	measured / real value
lim	limit
avg	average
rol	rolling
max	maximum
P_xxx	pump
M_xxx	mixing valve
HP	heat pump
V x	switching valve number

Scale
n.t.s. (A3 420x297)

Phase
D#6

Drawing Content-HDU
Controls

ME-5002

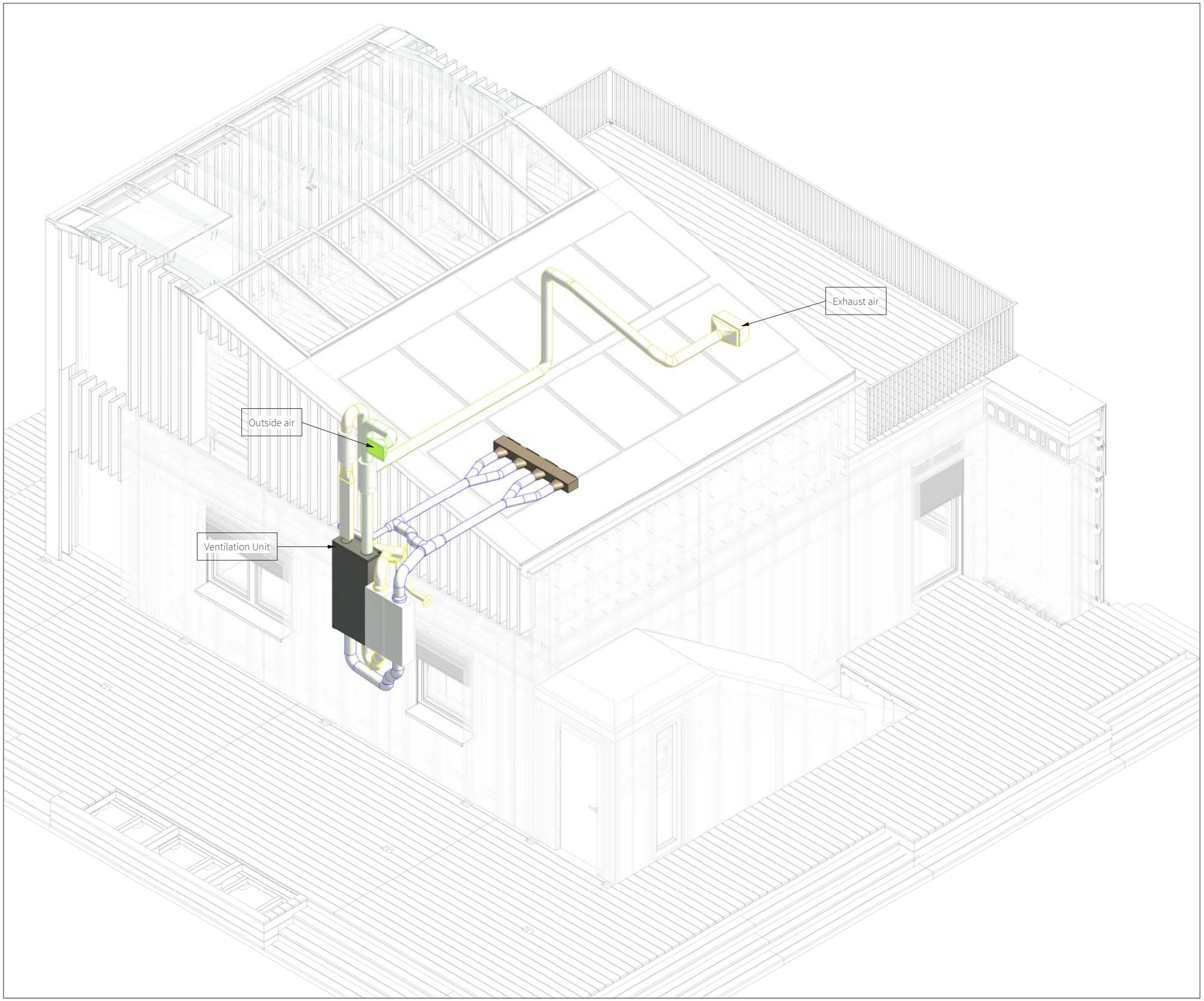

levelup

solar decathlon 21-22 europe
WUPPERTAL GERMANY

Scale

Phase
D#6

Drawing Content
Ventilation Distribution - Isometric

ME-6001

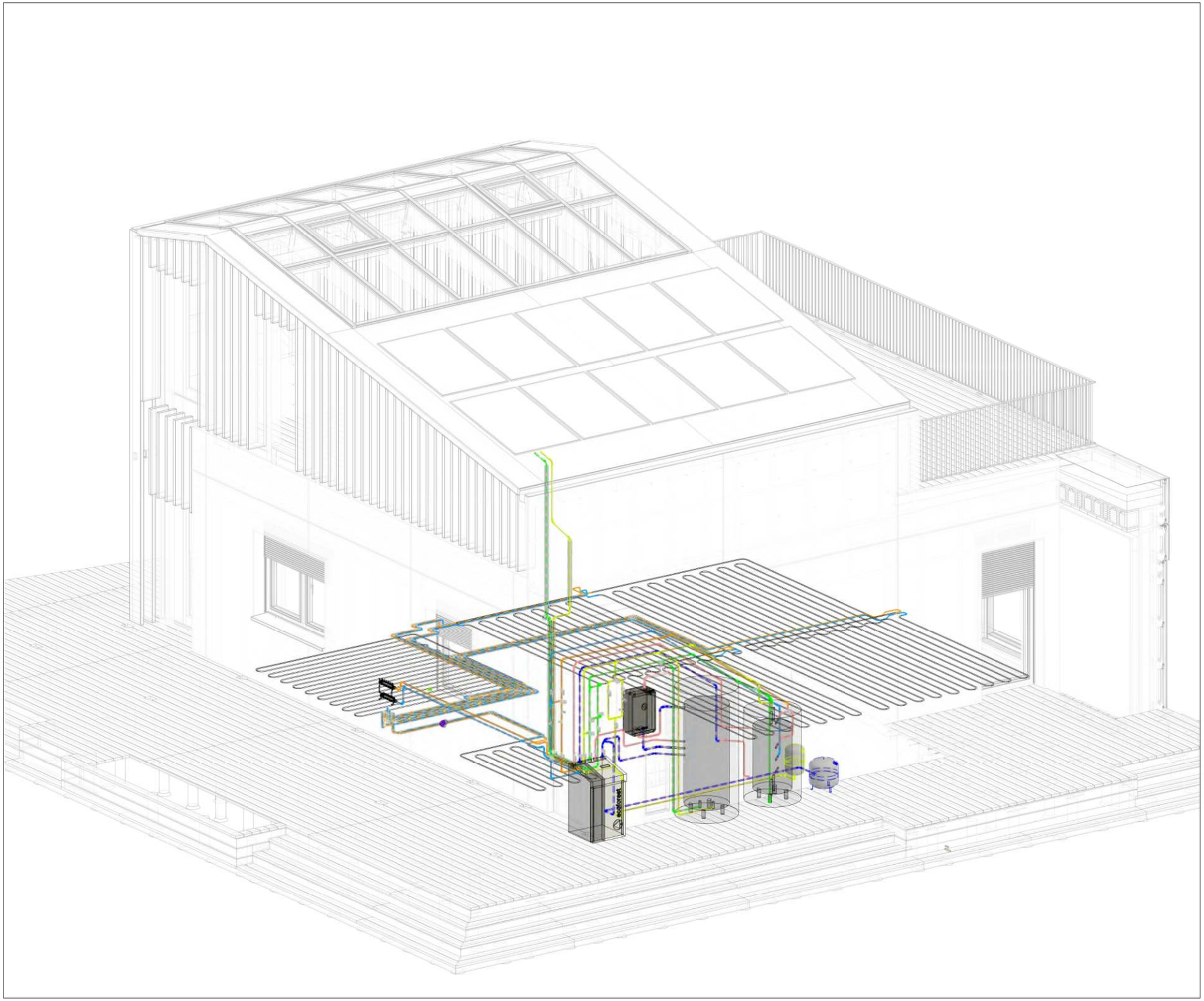

levelup

solar decathlon 21-22 europe
WUPPERTAL GERMANY

Scale

Phase
D#6

Drawing Content
Heating - Isometric

ME-6002

Electrical (EL)

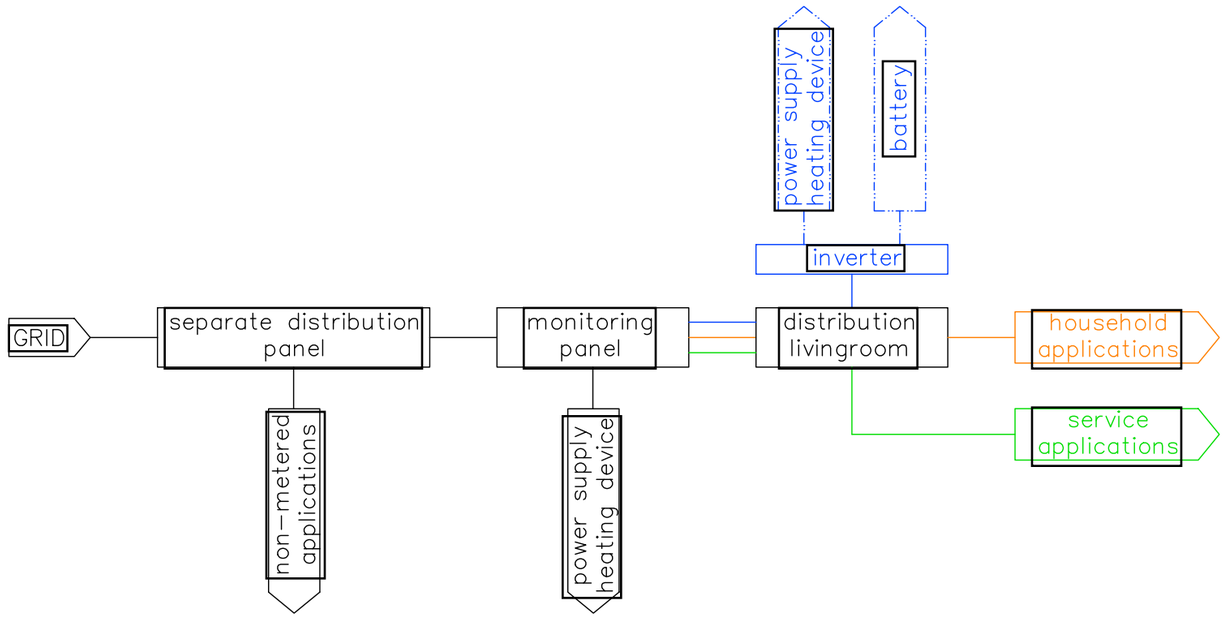

levelup

solar decathlon 21»22 europe
WUPPERTAL GERMANY

General	GE
Architecture	AR
Interiors	IN
Structural	ST
Plumbing	PL
Solar Water Heating	SW
Mechanical	ME
Electrical	**EL**
Photovoltaic System	PV
Teleco. & Build. Aut. System	BAS
Instrumentation Drawings	ID
Site Operations	SO
Fire Protection	FP
Health & Safety	HS
Public Tour	PT

General / Grid
PV - AC
PV - DC
Service (HVAC)
Household (light, household appliances,etc.)

Scale
n.t.s. (A3 420x297)

Phase
D#6

Drawing Content-HDU
Conceptual Drawings

EL-0001

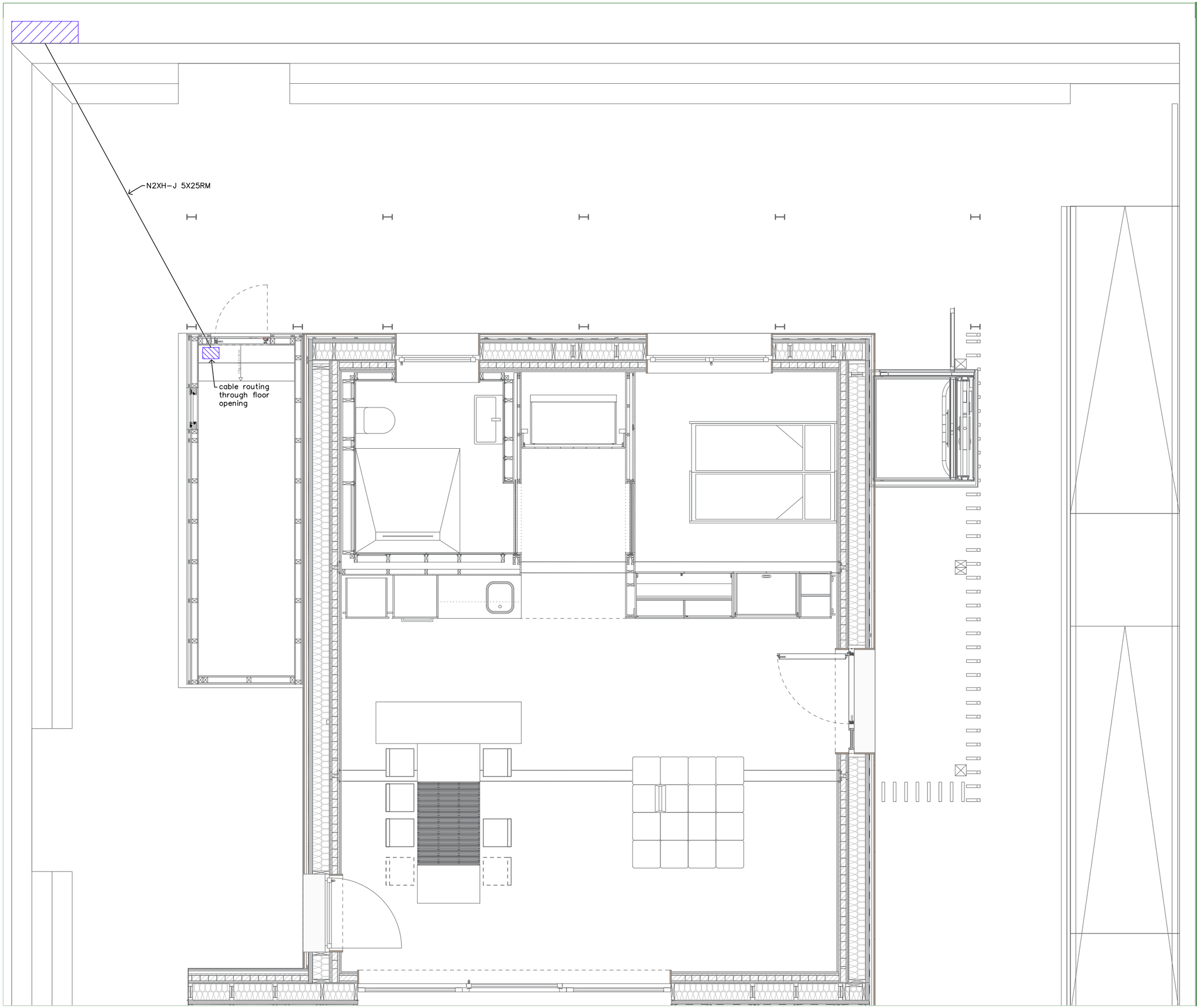

levelup

solar decathlon europe 21»22
WUPPERTAL GERMANY

General	GE
Architecture	AR
Interiors	IN
Structural	ST
Plumbing	PL
Solar Water Heating	SW
Mechanical	ME
Electrical	**EL**
Photovoltaic System	PV
Teleco. & Build. Aut. System	BAS
Instrumentation Drawings	ID
Site Operations	SO
Fire Protection	FP
Health & Safety	HS
Public Tour	PT

Legend

- cable
- general distribution box
- separate distribution panel

Scale
1:50 (A3 420x297)

Phase
D#6

Drawing Content-HDU
Grid Interconnection

EL-1001

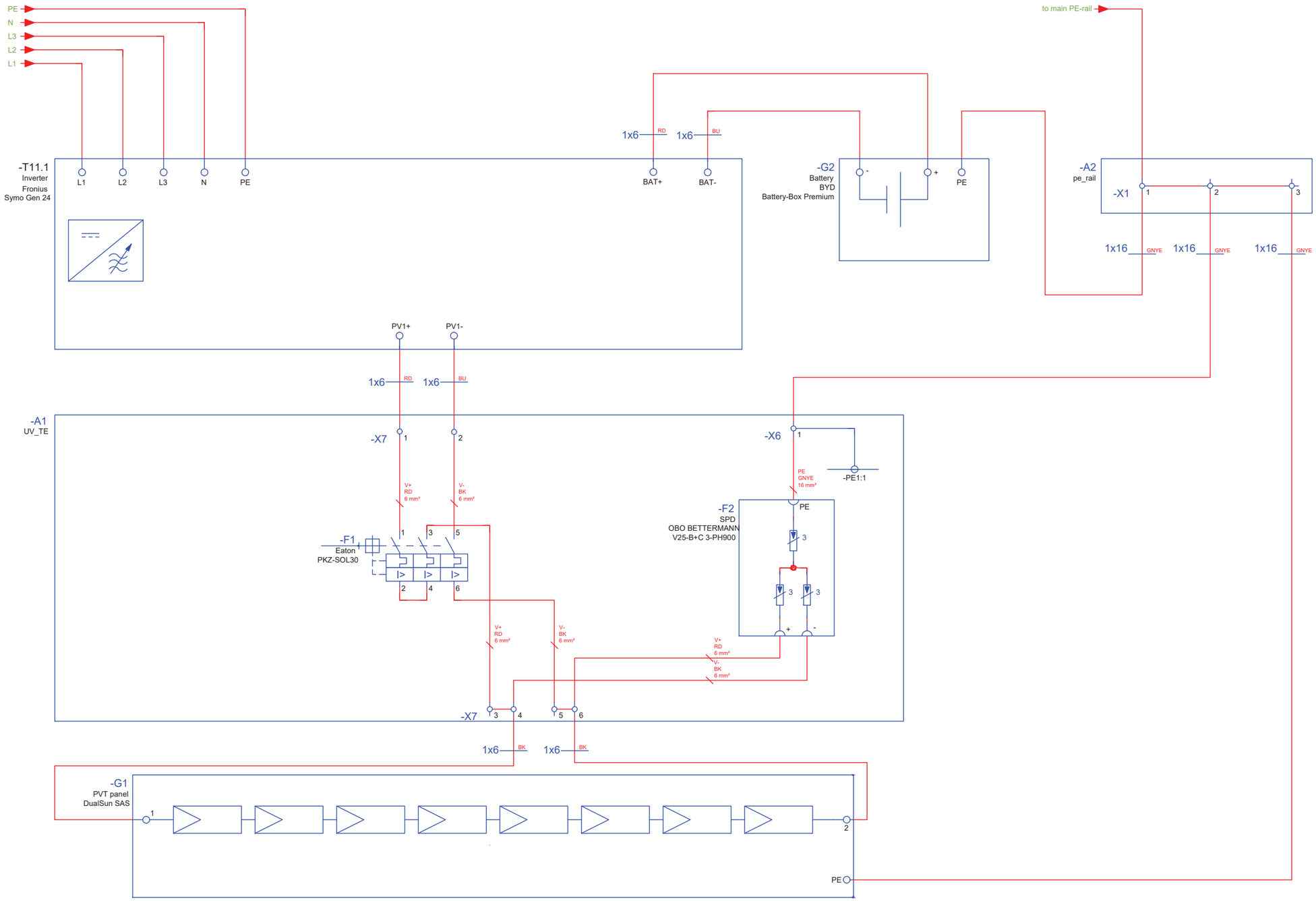

levelup

solar decathlon europe 21»22
WUPPERTAL GERMANY

Scale
n.t.s. (A3 420x297)

Phase
D#6

Drawing Content-HDU
DC wiring diagram

EL-2001

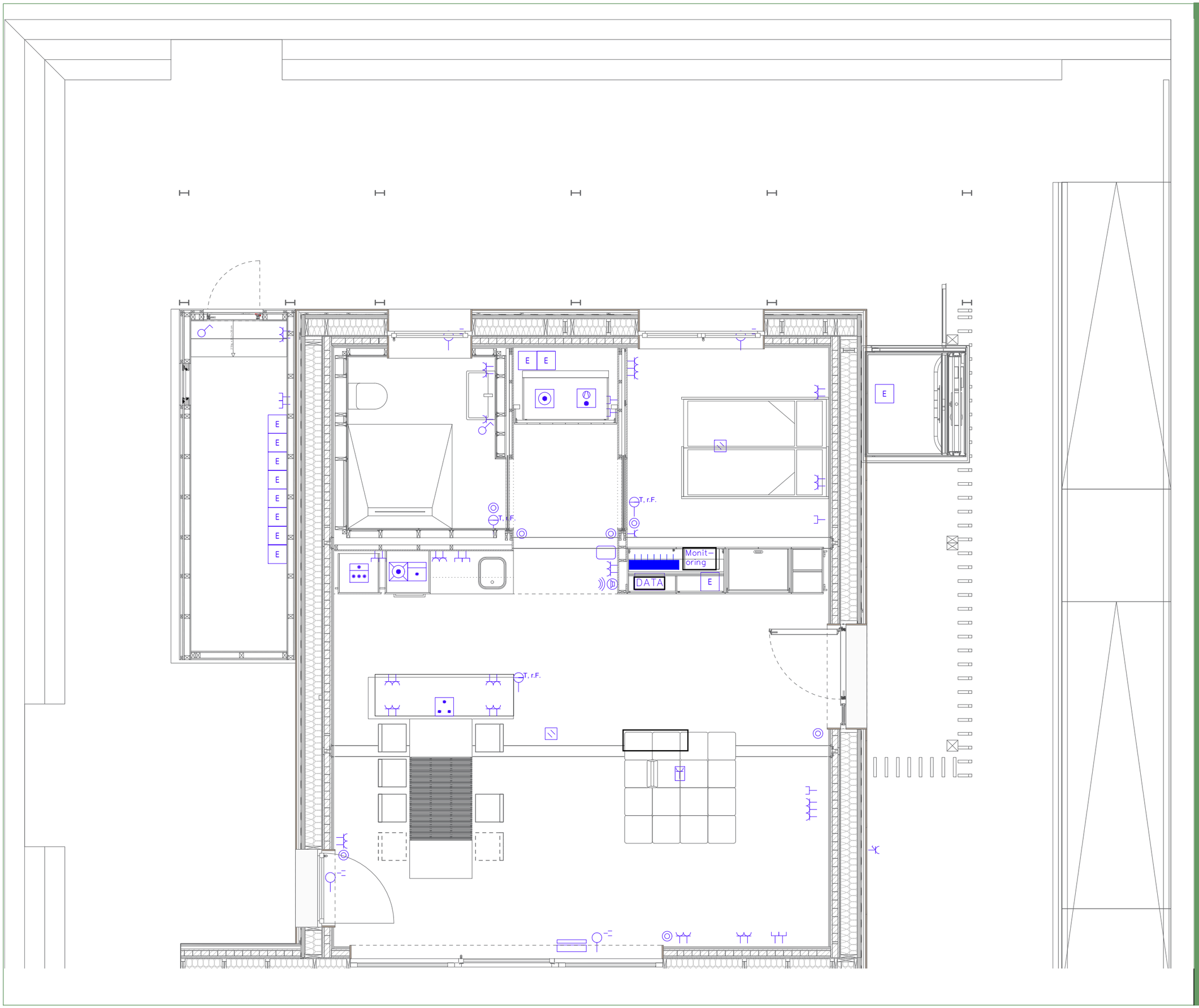

levelup

solar decathlon europe 21»22
WUPPERTAL GERMANY

General	GE
Architecture	AR
Interiors	IN
Structural	ST
Plumbing	PL
Solar Water Heating	SW
Mechanical	ME
Electrical	**EL**
Photovoltaic System	PV
Teleco. & Build. Aut. System	BAS
Instrumentation Drawings	ID
Site Operations	SO
Fire Protection	FP
Health & Safety	HS
Public Tour	PT

Legend

- button
- switch
- socket
- controllable socket
- electrical connection
- electrical distribution
- network distribution
- data socket
- smoke detector
- door-/Windowsensor
- blindsmotor
- temperatur- and humiditysensor
- display
- home assistant
- fridge & freezer
- dishwasher
- oven
- stove
- washer
- dryer

All sockets to be mounted at 30 cm above FF unless otherwise stated.

The cabling and conduit installation is to be carried out in accordance with the standard in the installation zones provided.

Scale
1:50 (A3 420x297)

Phase
D#6

Drawing Content-HDU

Power Plan
Level 01

EL-3001

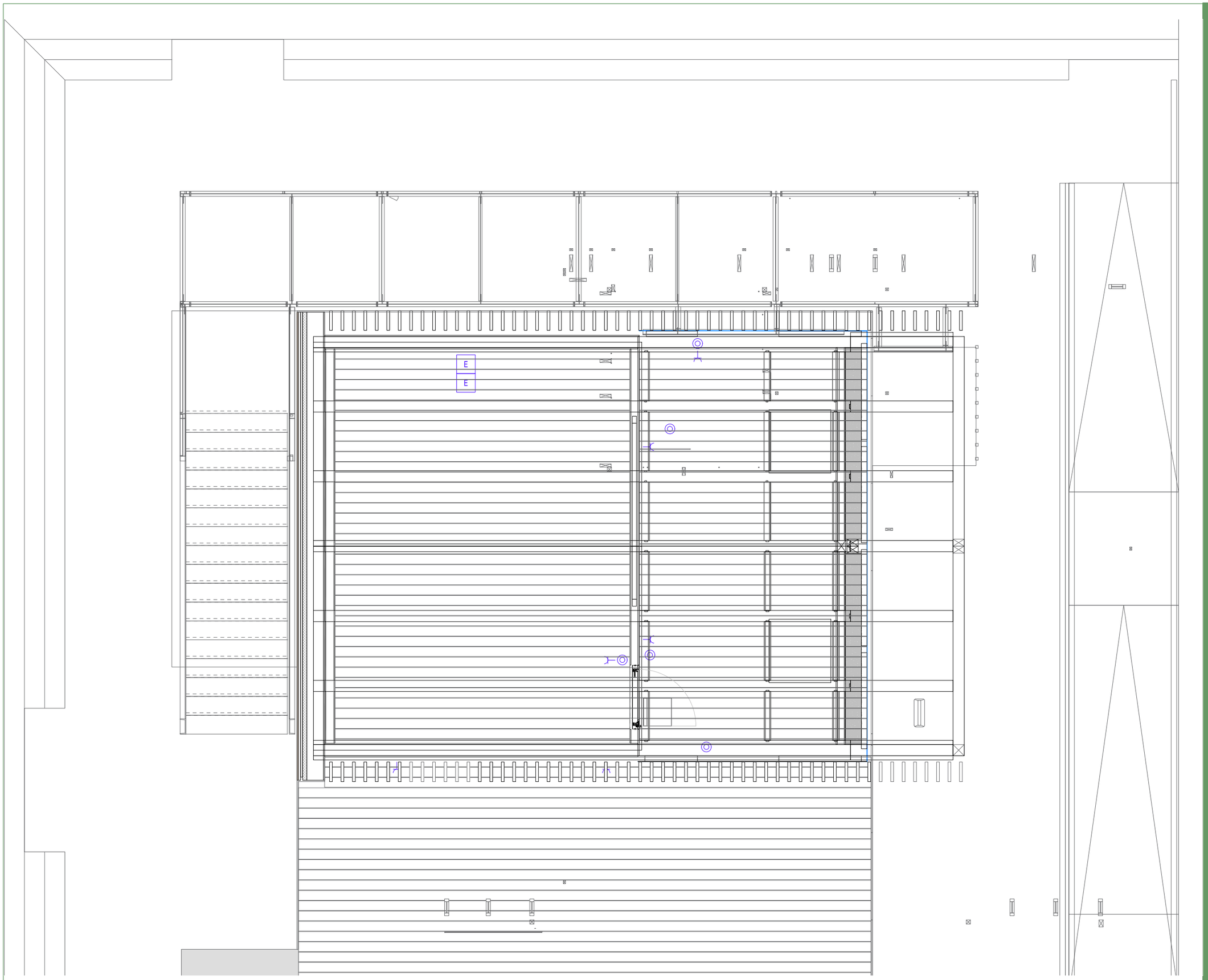

levelup

solar decathlon 21»22 europe
WUPPERTAL GERMANY

General	GE
Architecture	AR
Interiors	IN
Structural	ST
Plumbing	PL
Solar Water Heating	SW
Mechanical	ME
Electrical	**EL**
Photovoltaic System	PV
Teleco. & Build. Aut. System	BAS
Instrumentation Drawings	ID
Site Operations	SO
Fire Protection	FP
Health & Safety	HS
Public Tour	PT

Legend

- button
- switch
- socket
- controllable socket
- electrical connection
- electrical distribution
- network distribution
- data socket
- smoke detector
- door-/Windowsensor
- blindsmotor
- temperatur- and humiditysensor
- display
- home assistant
- fridge & freezer
- dishwasher
- oven
- stove
- washer
- dryer

All sockets to be mounted at 30 cm above FF unless otherwise stated.

The cabling and conduit installation is to be carried out in accordance with the standard in the installation zones provided.

Scale
1:50 (A3 420x297)

Phase
D#6

Drawing Content-HDU

Power Plan
Level 02

EL-3002

levelup

solar decathlon europe 21»22
WUPPERTAL GERMANY

General	GE
Architecture	AR
Interiors	IN
Structural	ST
Plumbing	PL
Solar Water Heating	SW
Mechanical	ME
Electrical	**EL**
Photovoltaic System	PV
Teleco. & Build. Aut. System	BAS
Instrumentation Drawings	ID
Site Operations	SO
Fire Protection	FP
Health & Safety	HS
Public Tour	PT

Legend

- button
- switch
- socket
- controllable socket
- electrical connection
- electrical distribution
- network distribution
- data socket
- smoke detector
- door-/Windowsensor
- blindsmotor
- temperatur- and humiditysensor
- display
- home assistant
- fridge & freezer
- dishwasher
- oven
- stove
- washer
- dryer

All sockets to be mounted at 30 cm above FF unless otherwise stated.

The cabling and conduit installation is to be carried out in accordance with the standard in the installation zones provided.

Scale
1:50 (A3 420x297)

Phase
D#6

Drawing Content-HDU

Power Plan
Level 03

EL-3003

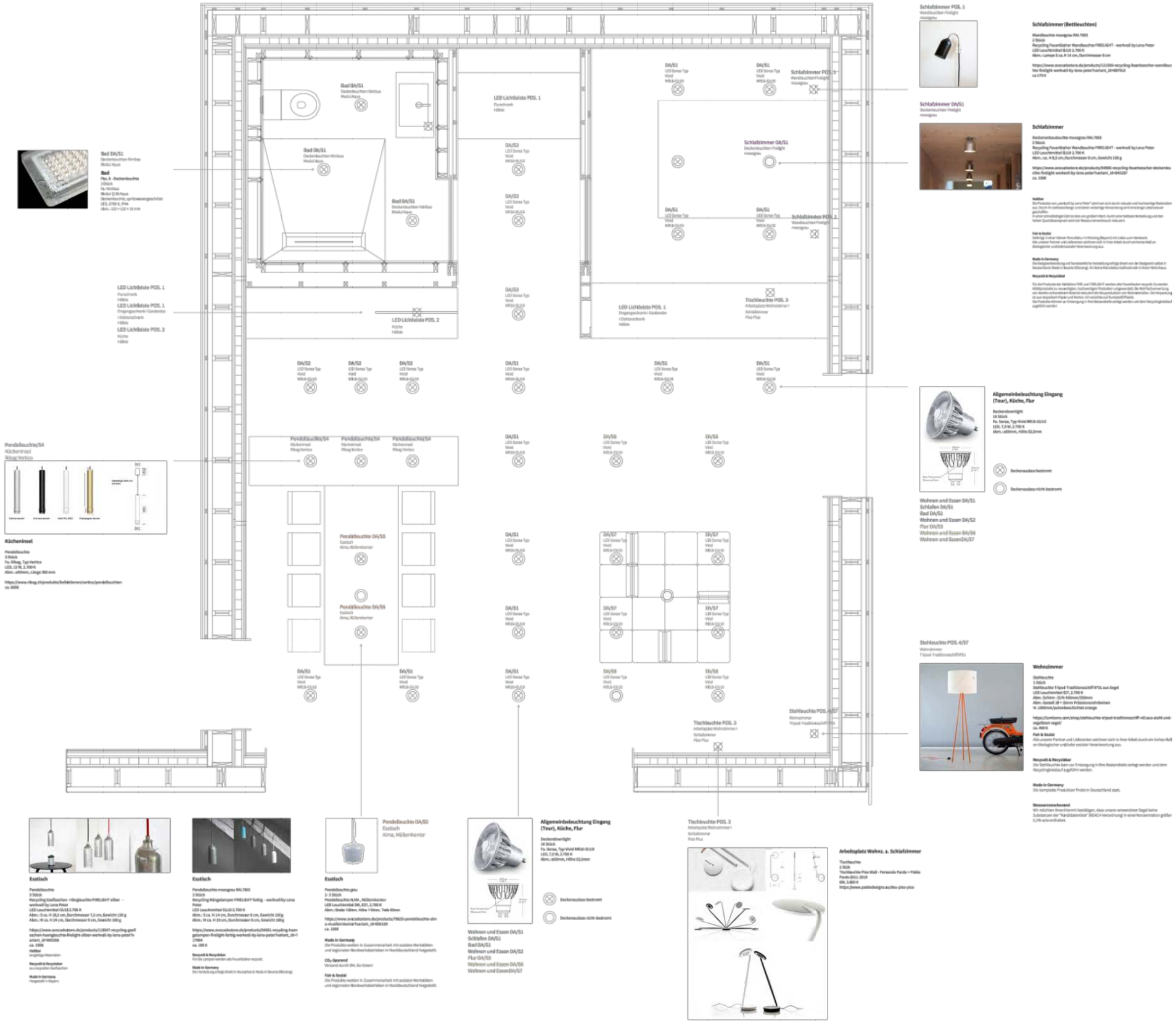

levelup

solar decathlon europe 21-22

WUPPERTAL GERMANY

Scale
1:50 (A3 420x297)

Phase
D#6

Drawing Content-HDU
Lighting Plan
Inside - Level 01

EL-4001

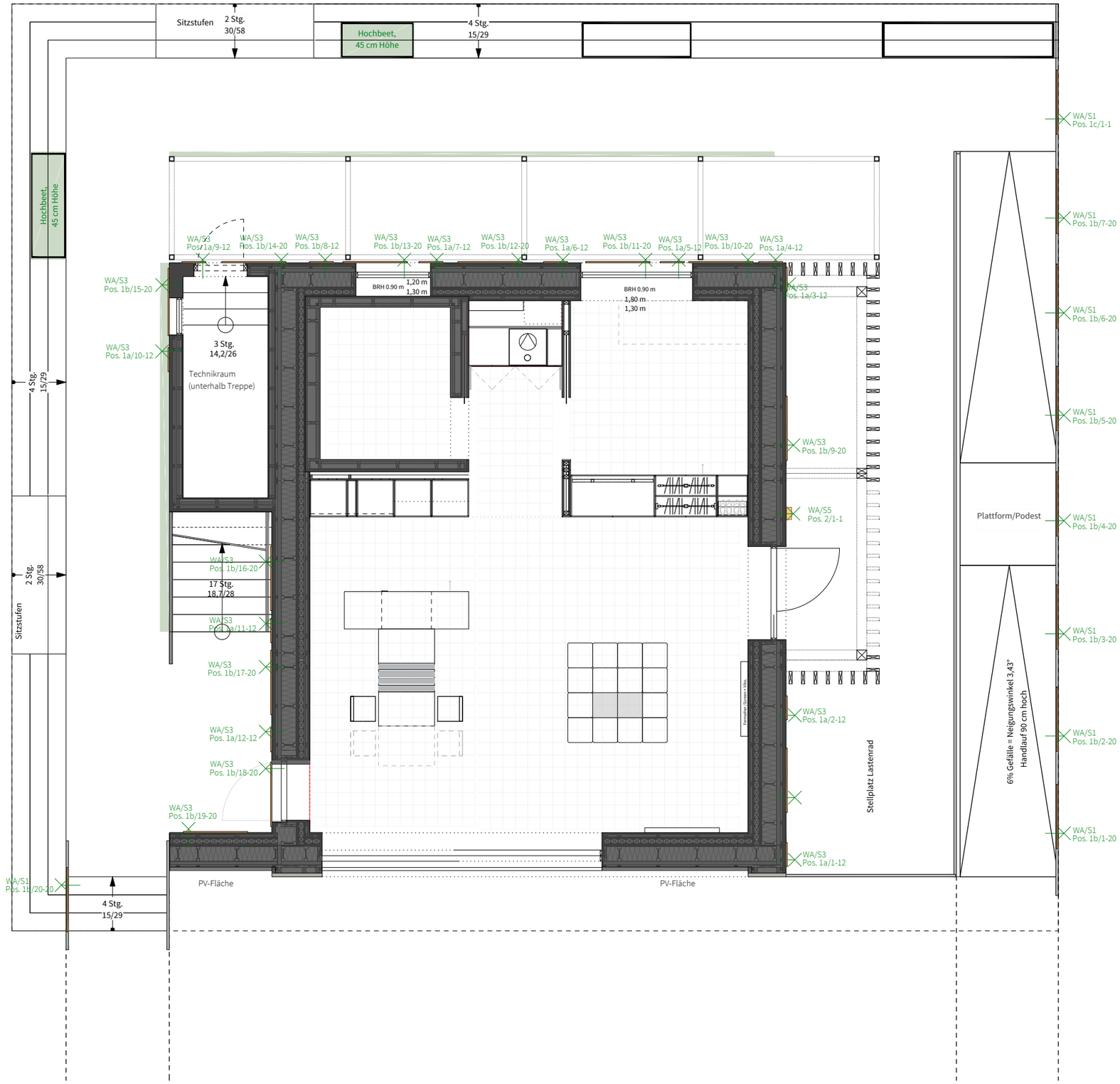

levelup

solar decathlon europe 21-22
WUPPERTAL GERMANY

General	GE
Architecture	AR
Interiors	IN
Structural	ST
Plumbing	PL
Solar Water Heating	SW
Mechanical	ME
Electrical	**EL**
Photovoltaic System	PV
Teleco. & Build. Aut. System	BAS
Instrumentation Drawings	ID
Site Operations	SO
Fire Protection	FP
Health & Safety	HS
Public Tour	PT

Pos. 1a/b/c – Lichtband

1a: 17 Stk., Länge ca. 385mm
Fa. InstaLight, Typ OHR 2 A1 L1
LED, 2,7W, 2.700 K, IP67,69,69K, D-Wire

1b: 26 Stk., Länge ca. 1035mm
Fa. InstaLight, Typ OHR 2 A1 L1
LED, 8W, 2.700 K, IP67,69,69K, D-Wire

1c: 1 Stk., Länge ca. 1035mm
Fa. InstaLight, Typ OHR 2 A2 L1
LED, 8W, 2.700 K, IP67,69,69K, D-Wire

Pos. 2 – Wandanbauleuchte

1 Stück
Fa. Louis Poulsen, Typ Flindt ø200mm
LED, 10 W, 2.700 K, DALI

Pos. 3 – Pendelleuchte

6 Stück
Fa. Nimbus, Typ Underscore InOut EA42
LED, W, 2.700 K, IP, on/off

Pos. 4 – Tragbare Leuchte

5 Stück
Fa. Tobias Grau, Typ Salt&Pepper
LED, 5 W, 2.700-2.200 K, IP21, on/off

Scale
1:75 (A3 420x297)

Phase
D#6

Drawing Content-HDU
Lighting Plan
Outside - Level 01

EL-4002

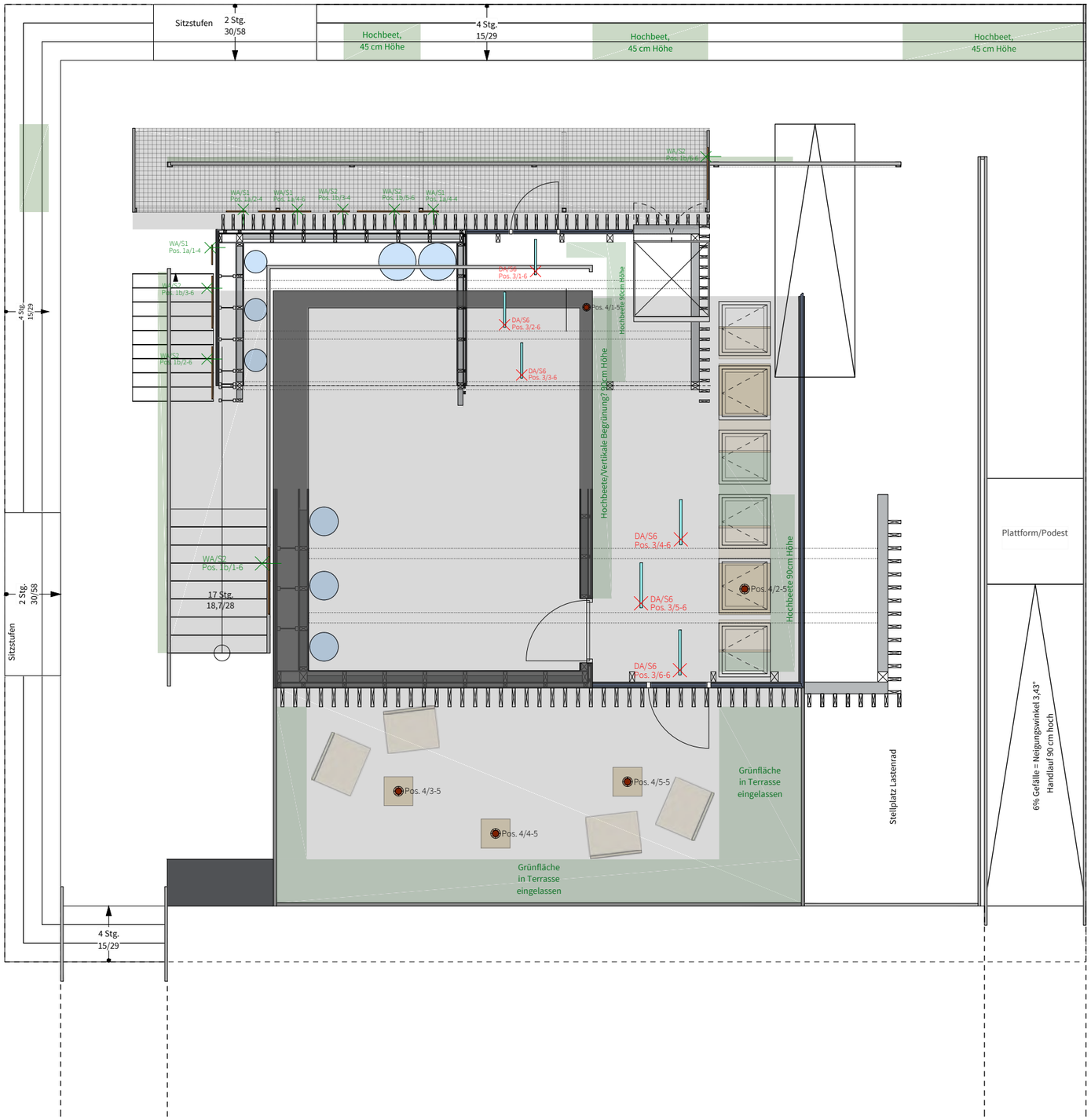

levelup

solar decathlon europe 21-22
WUPPERTAL GERMANY

General	GE
Architecture	AR
Interiors	IN
Structural	ST
Plumbing	PL
Solar Water Heating	SW
Mechanical	ME
Electrical	**EL**
Photovoltaic System	PV
Teleco. & Build. Aut. System	BAS
Instrumentation Drawings	ID
Site Operations	SO
Fire Protection	FP
Health & Safety	HS
Public Tour	PT

Pos. 1a/b/c – Lichtband

1a: 17 Stk., Länge ca. 385mm
Fa. InstaLight, Typ OHR 2 A1 L1
LED, 2,7W, 2.700 K, IP67,69,69K, D-Wire

1b: 26 Stk., Länge ca. 1035mm
Fa. InstaLight, Typ OHR 2 A1 L1
LED, 8W, 2.700 K, IP67,69,69K, D-Wire

1c: 1 Stk., Länge ca. 1035mm
Fa. InstaLight, Typ OHR 2 A2 L1
LED, 8W, 2.700 K, IP67,69,69K, D-Wire

Pos. 2 – Wandanbauleuchte

1 Stück
Fa. Louis Poulsen, Typ Flindt ø200mm
LED, 10 W, 2.700 K, DALI

Pos. 3 – Pendelleuchte

6 Stück
Fa. Nimbus, Typ Underscore InOut EA42
LED, W, 2.700 K, IP, on/off

Pos. 4 – Tragbare Leuchte

5 Stück
Fa. Tobias Grau, Typ Salt&Pepper
LED, 5 W, 2.700-2.200 K, IP21, on/off

Scale **1:75** (A3 420x297)

Phase **D#6**

Drawing Content-HDU

Lighting Plan

Outside - Level 02

EL-4003

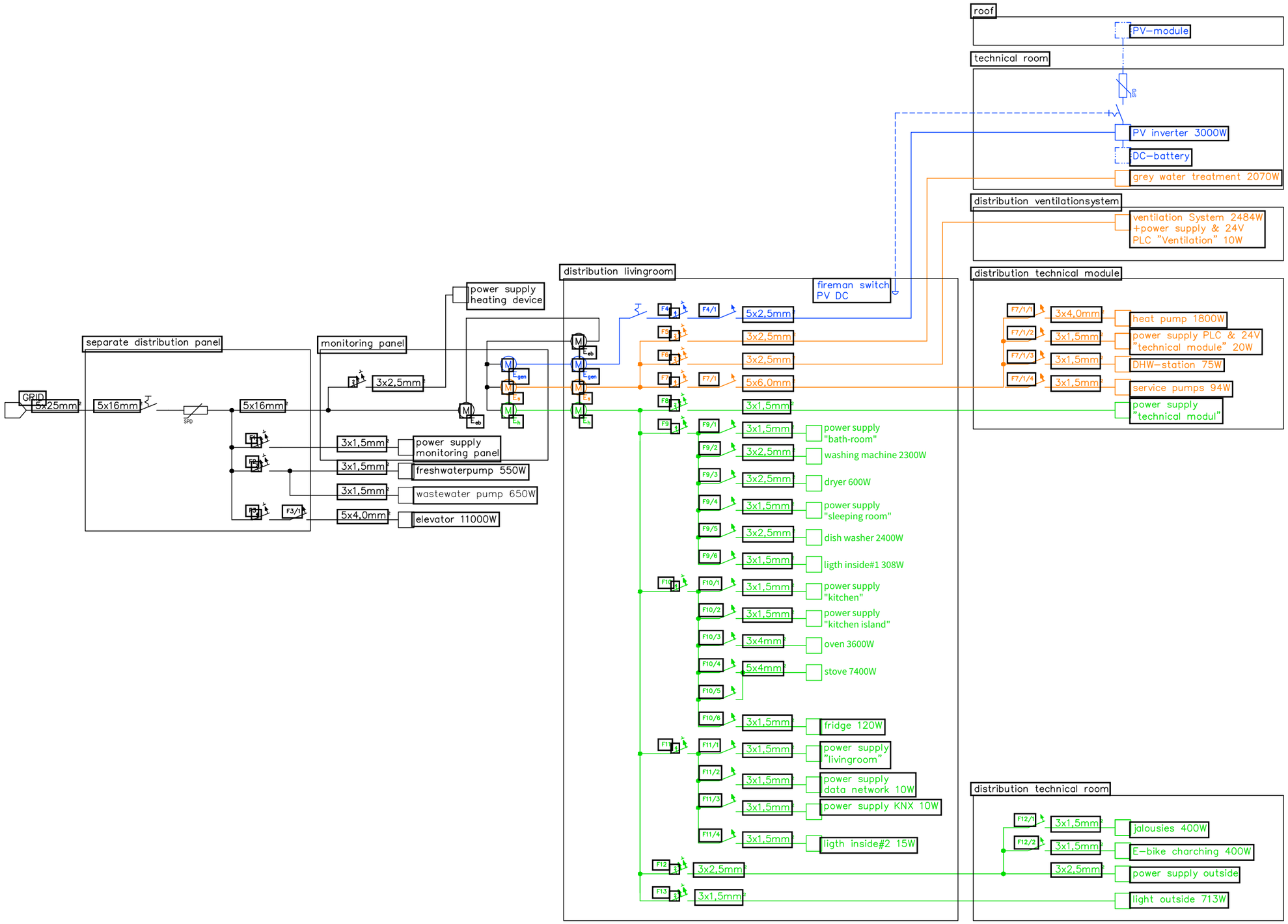

levelup

solar decathlon europe 21»22
WUPPERTAL GERMANY

General	GE
Architecture	AR
Interiors	IN
Structural	ST
Plumbing	PL
Solar Water Heating	SW
Mechanical	ME
Electrical	**EL**
Photovoltaic System	PV
Teleco. & Build. Aut. System	BAS
Instrumentation Drawings	ID
Site Operations	SO
Fire Protection	FP
Health & Safety	HS
Public Tour	PT

General / Grid
PV - AC
PV - DC
Service (HVAC)
Household (light, household appliances,etc.)

Scale
n.t.s. (A3 420x297)

Phase
D#6

Drawing Content-HDU
One-line Diagram

EL-5001

technical modul
++EG+TM

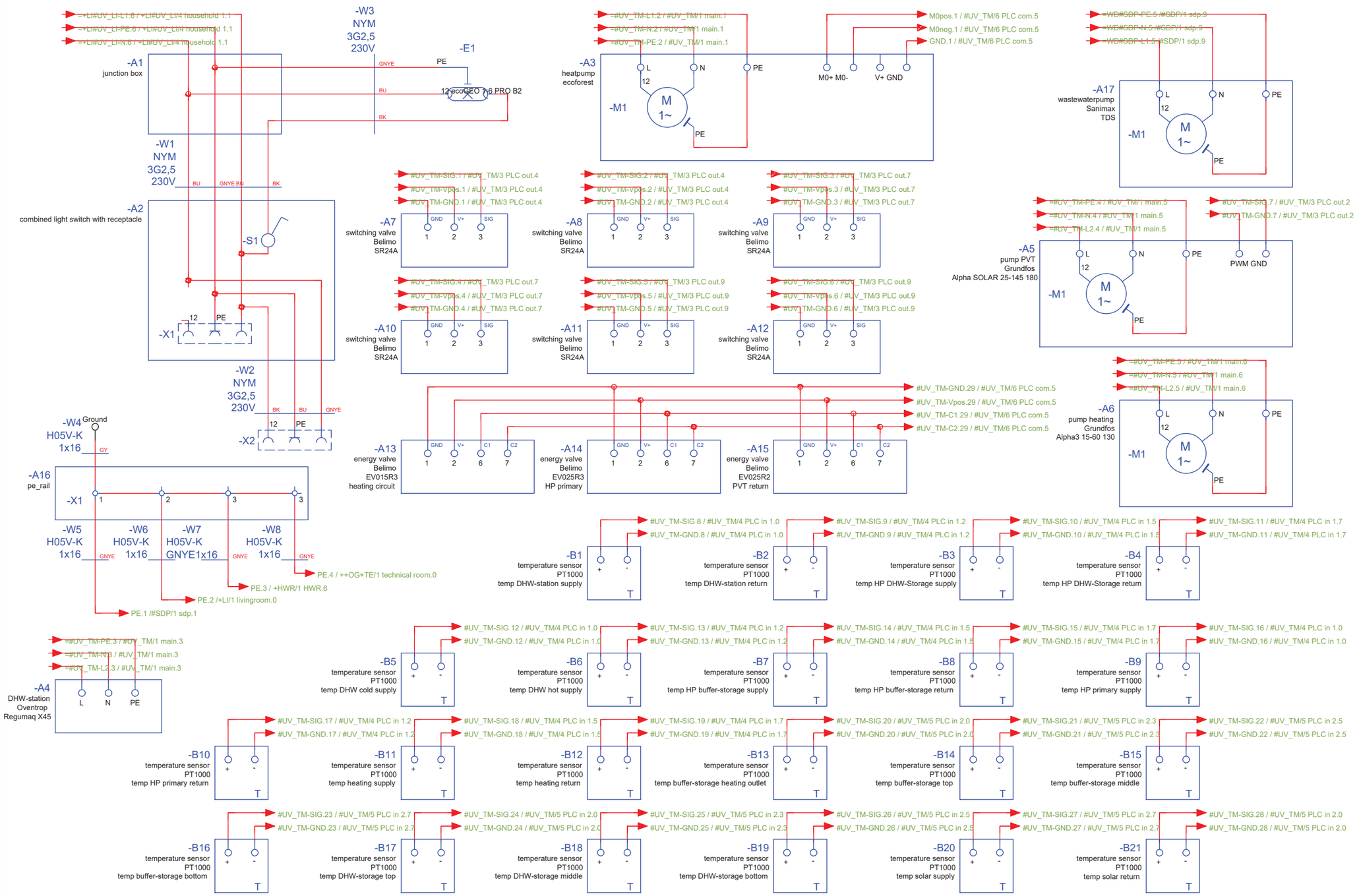

levelup

solar decathlon europe 21-22
WUPPERTAL GERMANY

Scale
n.t.s. (A3 420x297)

Phase
D#6

Drawing Content-HDU
AC Circuit layout

EL-6001

technical modul - distribution
++EG+TM#UV_TM/main

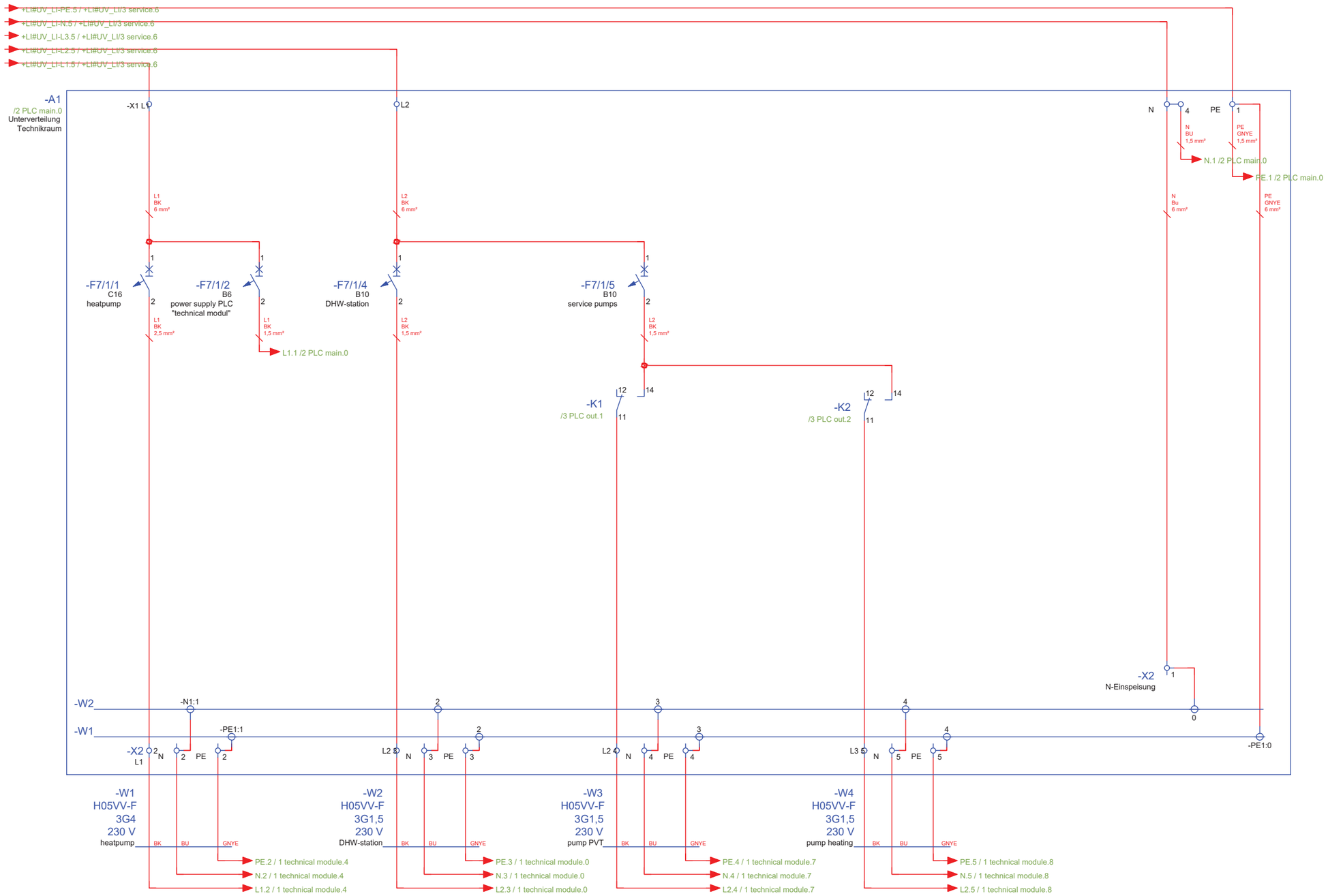

levelup

solar decathlon europe 21-22
WUPPERTAL GERMANY

General	GE
Architecture	AR
Interiors	IN
Structural	ST
Plumbing	PL
Solar Water Heating	SW
Mechanical	ME
Electrical	**EL**
Photovoltaic System	PV
Teleco. & Build. Aut. System	BAS
Instrumentation Drawings	ID
Site Operations	SO
Fire Protection	FP
Health & Safety	HS
Public Tour	PT

Scale
n.t.s. (A3 420x297)

Phase
D#6

Drawing Content-HDU
AC Circuit layout

EL-6002

technical modul - distribution
++EG+TM#UV_TM/PLC_main

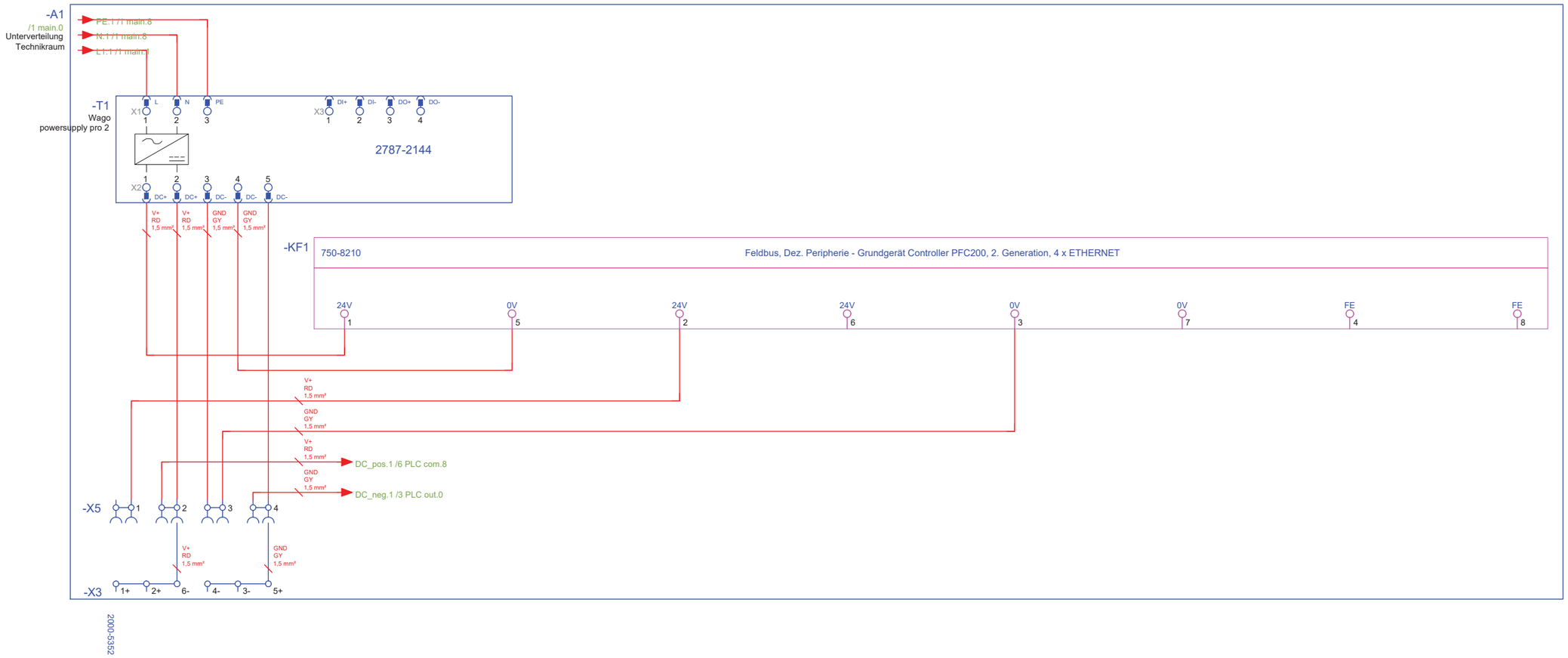

levelup

solar decathlon europe 21-22
WUPPERTAL GERMANY

General	GE
Architecture	AR
Interiors	IN
Structural	ST
Plumbing	PL
Solar Water Heating	SW
Mechanical	ME
Electrical	**EL**
Photovoltaic System	PV
Teleco. & Build. Aut. System	BAS
Instrumentation Drawings	ID
Site Operations	SO
Fire Protection	FP
Health & Safety	HS
Public Tour	PT

Scale
n.t.s. (A3 420x297)

Phase
D#6

Drawing Content-HDU
AC Circuit layout

EL-6003

technical modul - seperat distribuition panel
++EG+TM#SDP

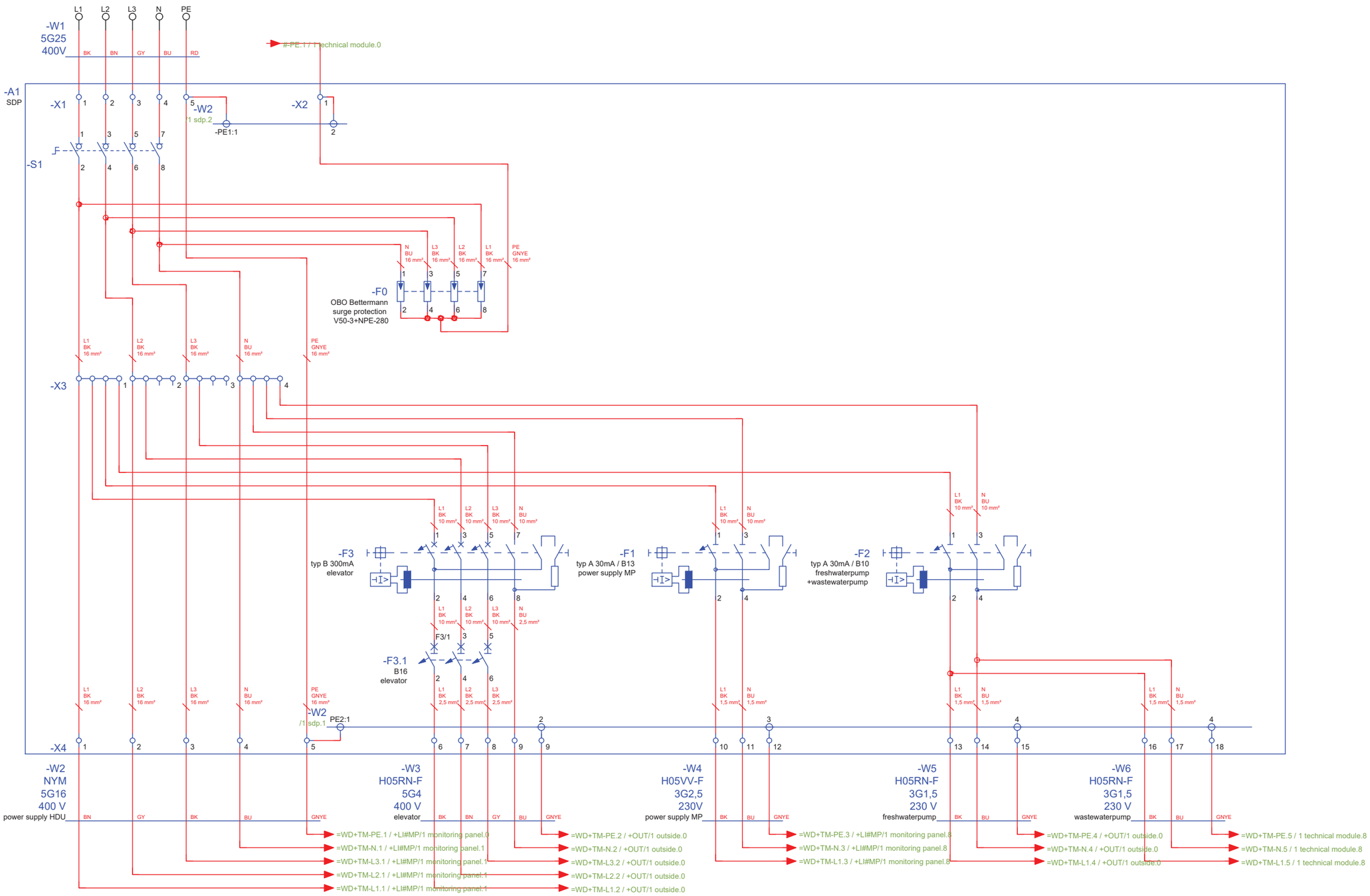

levelup

solar decathlon europe 21-22
WUPPERTAL GERMANY

General	GE
Architecture	AR
Interiors	IN
Structural	ST
Plumbing	PL
Solar Water Heating	SW
Mechanical	ME
Electrical	**EL**
Photovoltaic System	PV
Teleco. & Build. Aut. System	BAS
Instrumentation Drawings	ID
Site Operations	SO
Fire Protection	FP
Health & Safety	HS
Public Tour	PT

Scale
n.t.s. (A3 420x297)

Phase
D#6

Drawing Content-HDU
AC Circuit layout

EL-6004

utility room
++EG+HWR

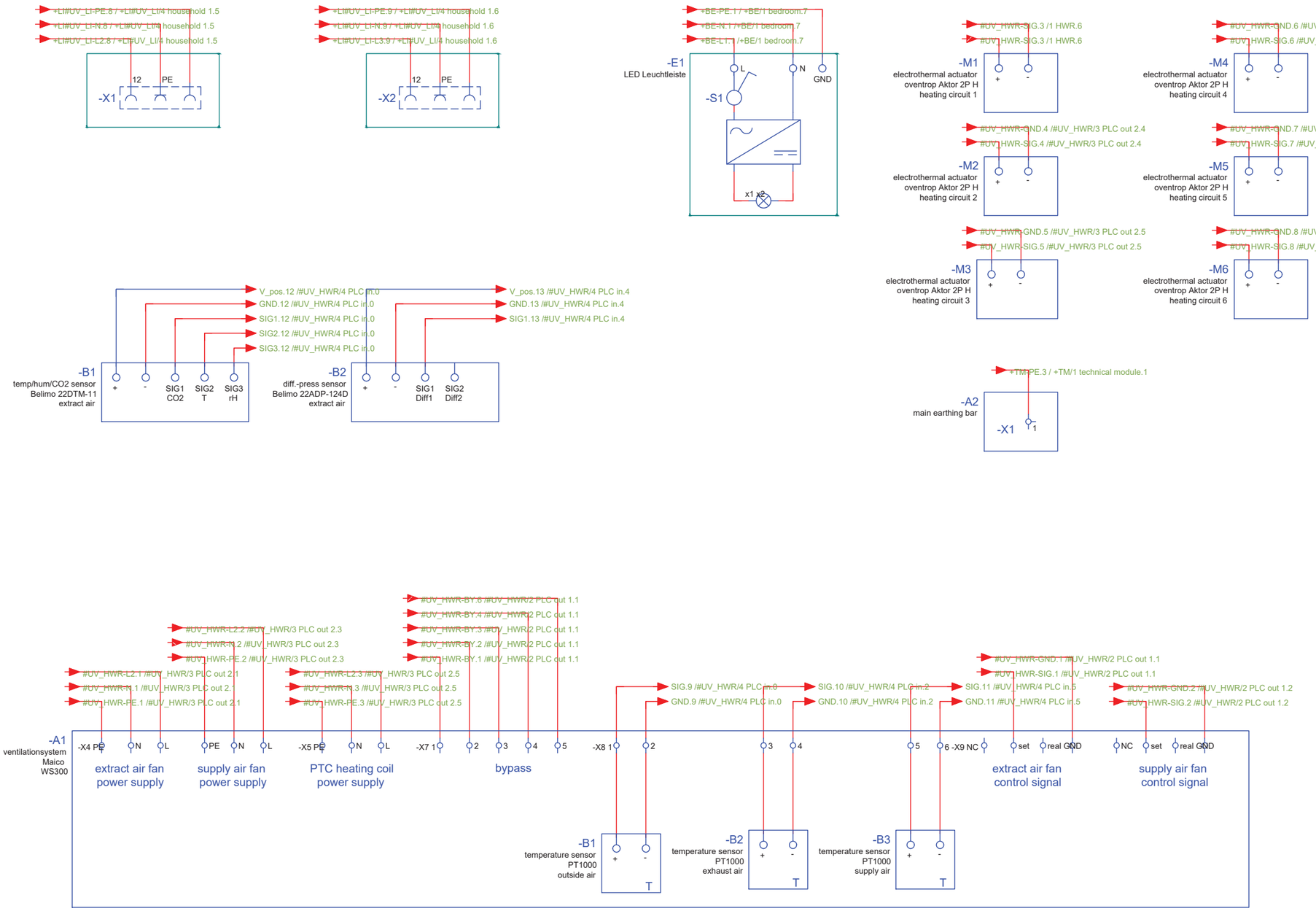

levelup

solar decathlon europe 21-22
WUPPERTAL GERMANY

General	GE
Architecture	AR
Interiors	IN
Structural	ST
Plumbing	PL
Solar Water Heating	SW
Mechanical	ME
Electrical	**EL**
Photovoltaic System	PV
Teleco. & Build. Aut. System	BAS
Instrumentation Drawings	ID
Site Operations	SO
Fire Protection	FP
Health & Safety	HS
Public Tour	PT

Scale
n.t.s. (A3 420x297)

Phase
D#6

Drawing Content-HDU
AC Circuit layout

EL-6005

utility room - distribution
++EG+HWR#UV_HWR/PLC_main

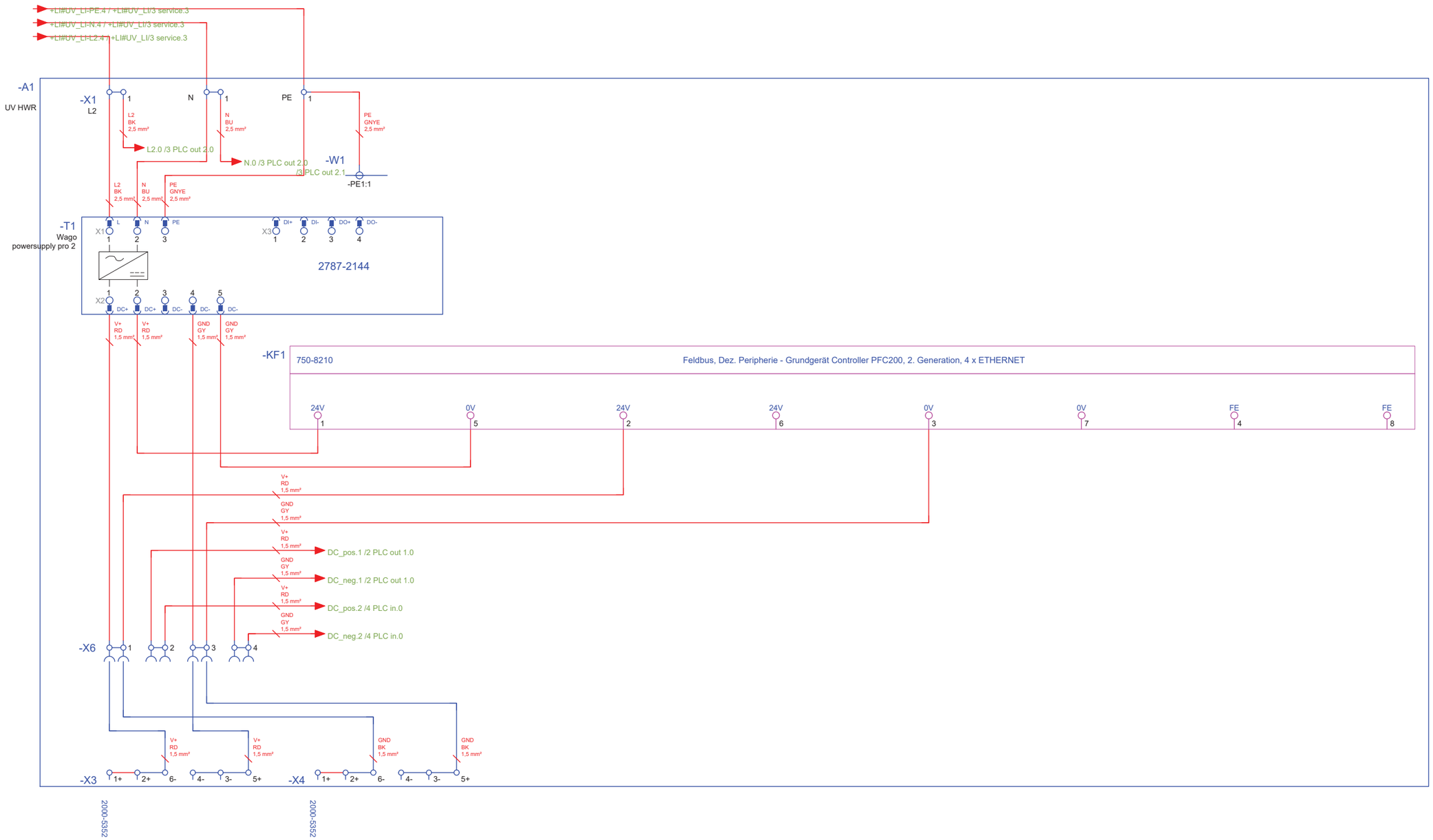

levelup

solar decathlon europe 21-22
WUPPERTAL GERMANY

Scale
n.t.s. (A3 420x297)

Phase
D#6

Drawing Content-HDU
AC Circuit layout

EL-6006

utility room - distribution
++EG+HWR#UV_HWR/PLC_OUT 2

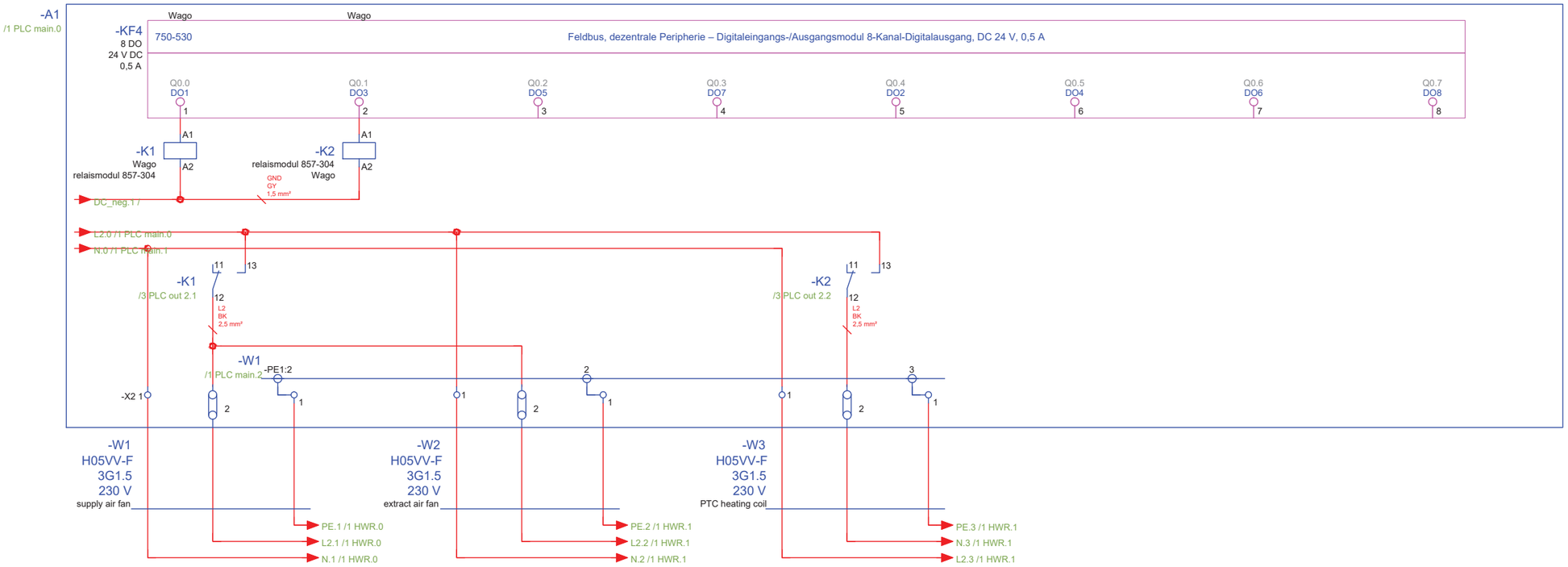

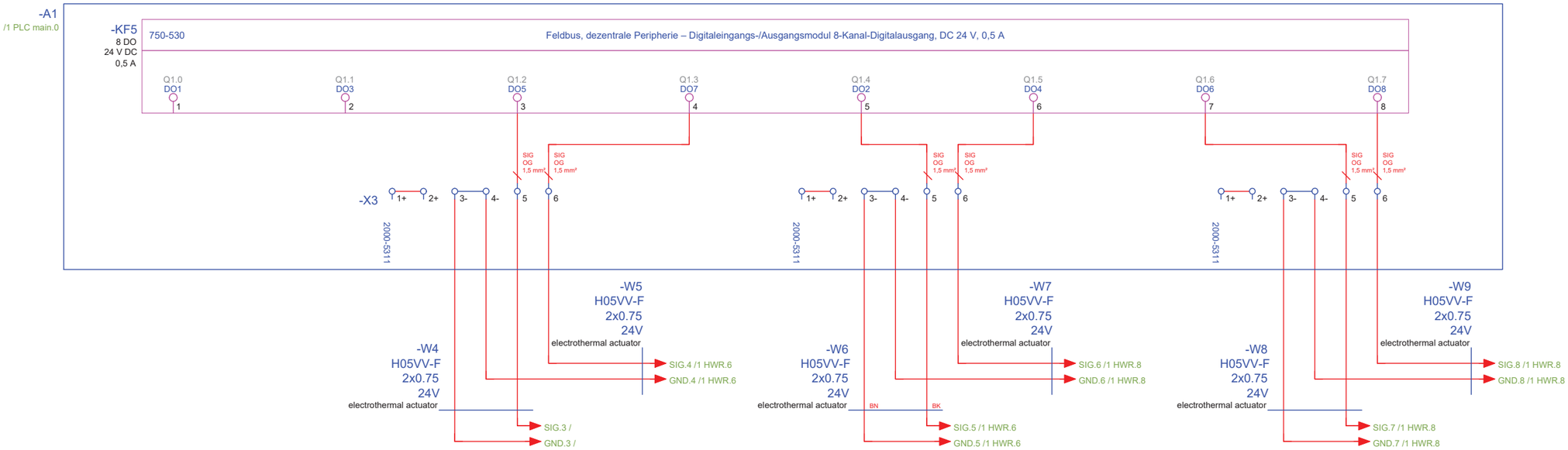

levelup

solar decathlon europe 21-22
WUPPERTAL GERMANY

Scale
n.t.s. (A3 420x297)

Phase
D#6

Drawing Content-HDU
AC Circuit layout

EL-6007

bathroom
++EG+BA

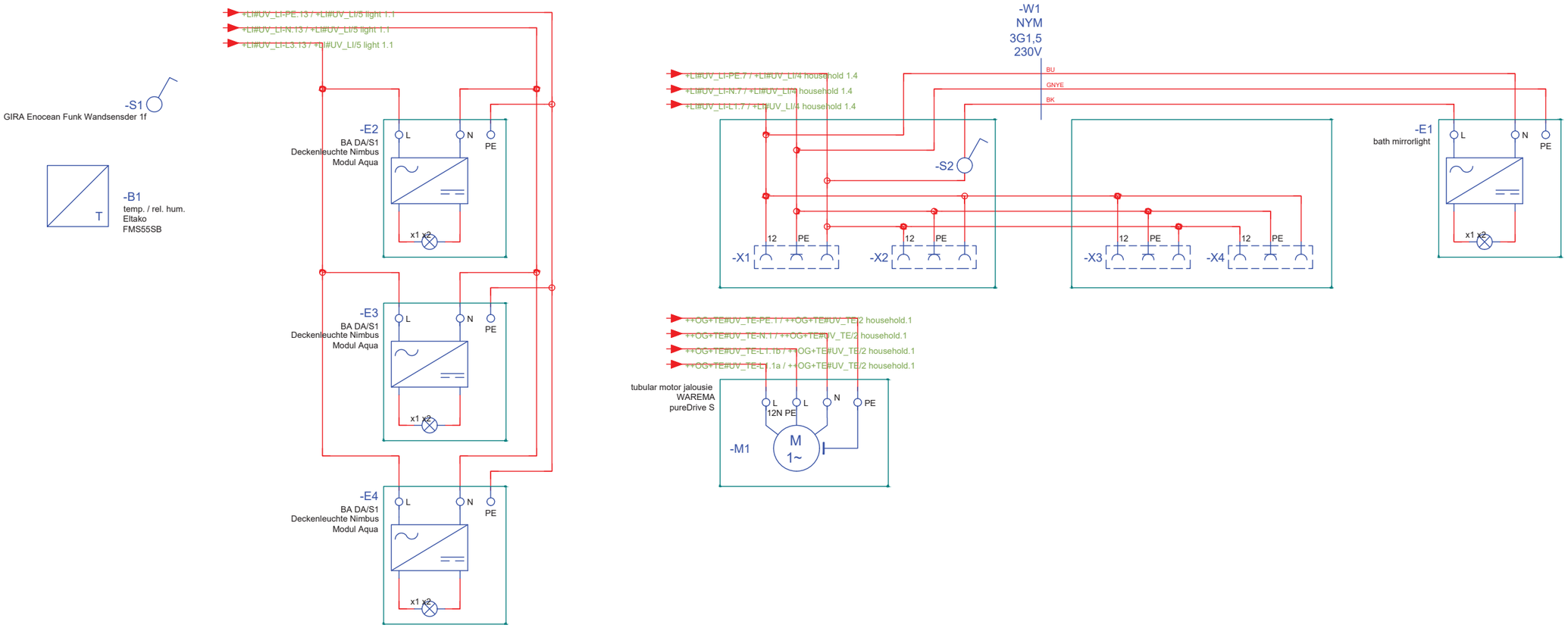

levelup

solar decathlon europe 21-22
WUPPERTAL GERMANY

Scale
n.t.s. (A3 420x297)

Phase
D#6

Drawing Content-HDU
AC Circuit layout

EL-6008

outside
++EG+OUT

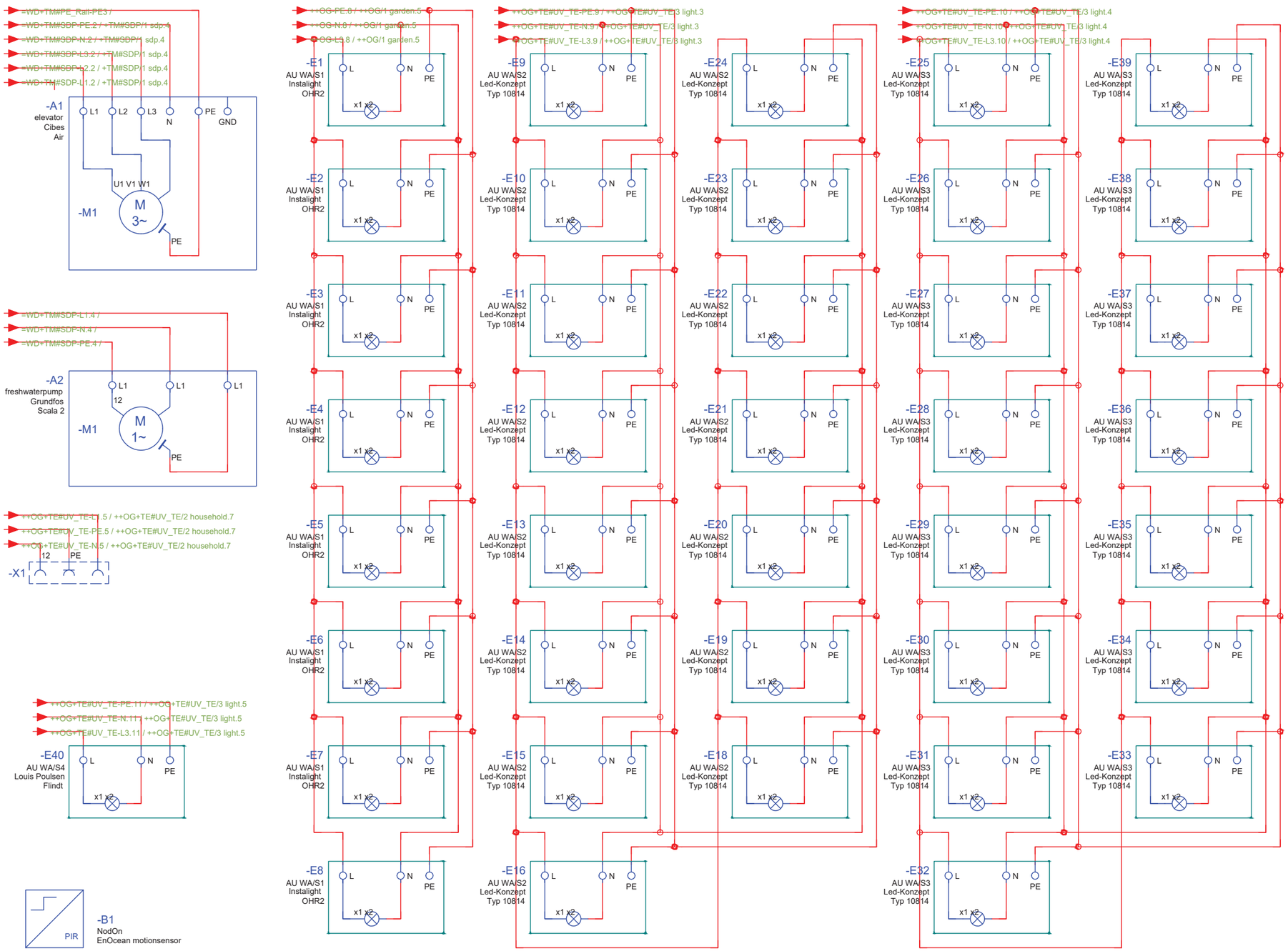

levelup

solar decathlon europe 21-22
WUPPERTAL GERMANY

Scale
n.t.s. (A3 420x297)

Phase
D#6

Drawing Content-HDU
AC Circuit layout

EL-6009

livingroom
++EG+LI

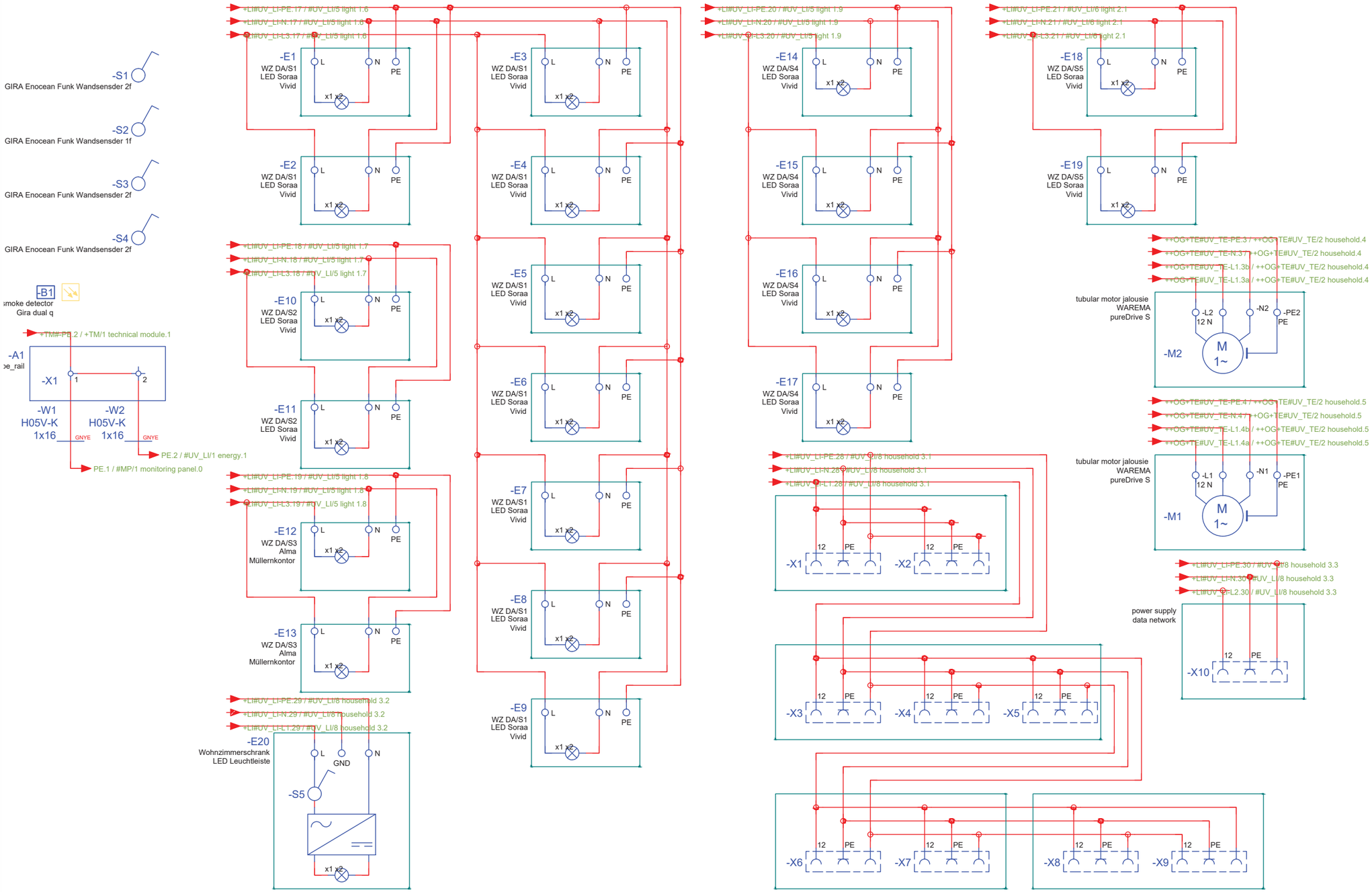

levelup

solar decathlon europe 21-22
WUPPERTAL GERMANY

Scale
n.t.s. (A3 420x297)

Phase
D#6

Drawing Content-HDU
AC Circuit layout

EL-6010

livingroom - monitoring panel
++EG+LI#MP

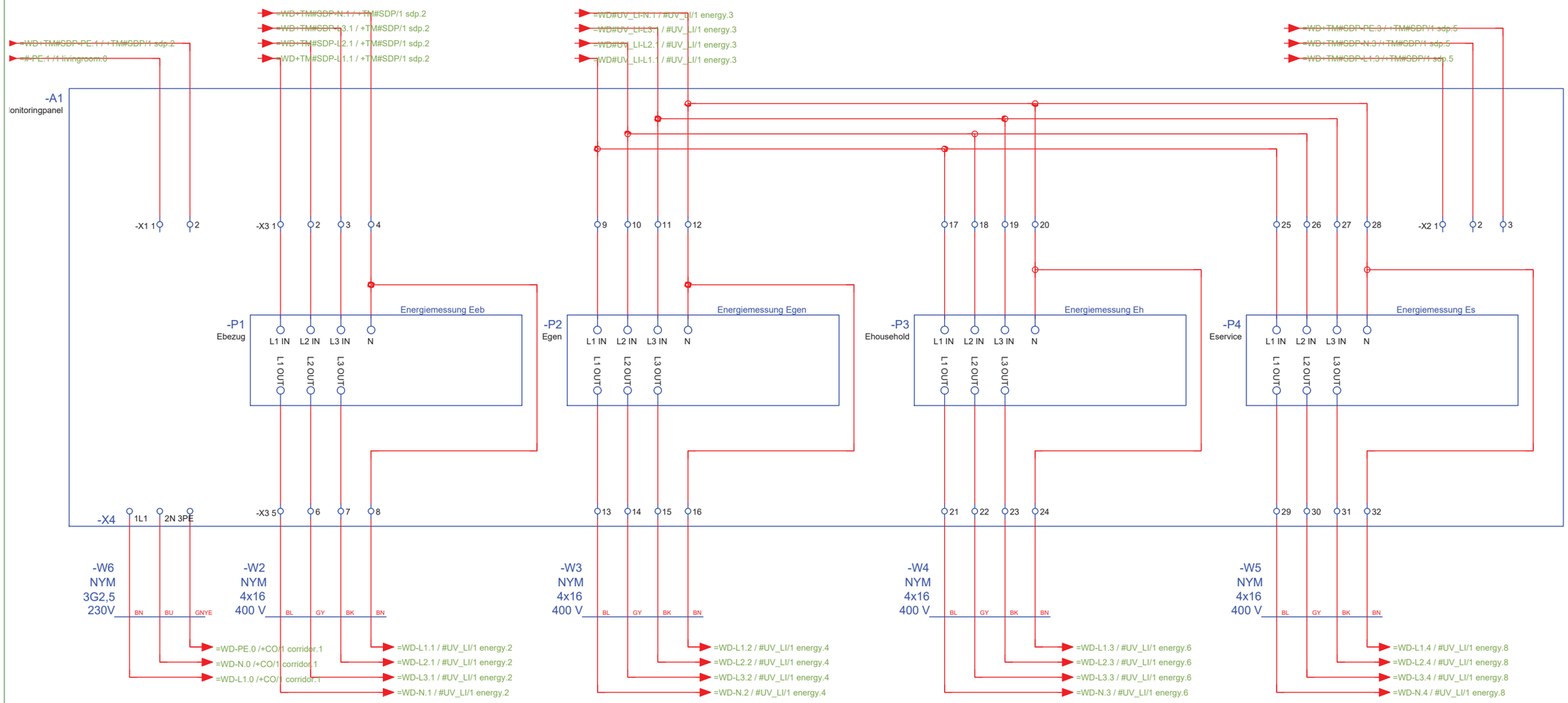

levelup

solar decathlon 21-22 europe
WUPPERTAL GERMANY

Scale
n.t.s. (A3 420x297)

Phase
D#6

Drawing Content-HDU
AC Circuit layout

EL-6011

livingroom - distribution
++EG+LI#UV_LI/energy

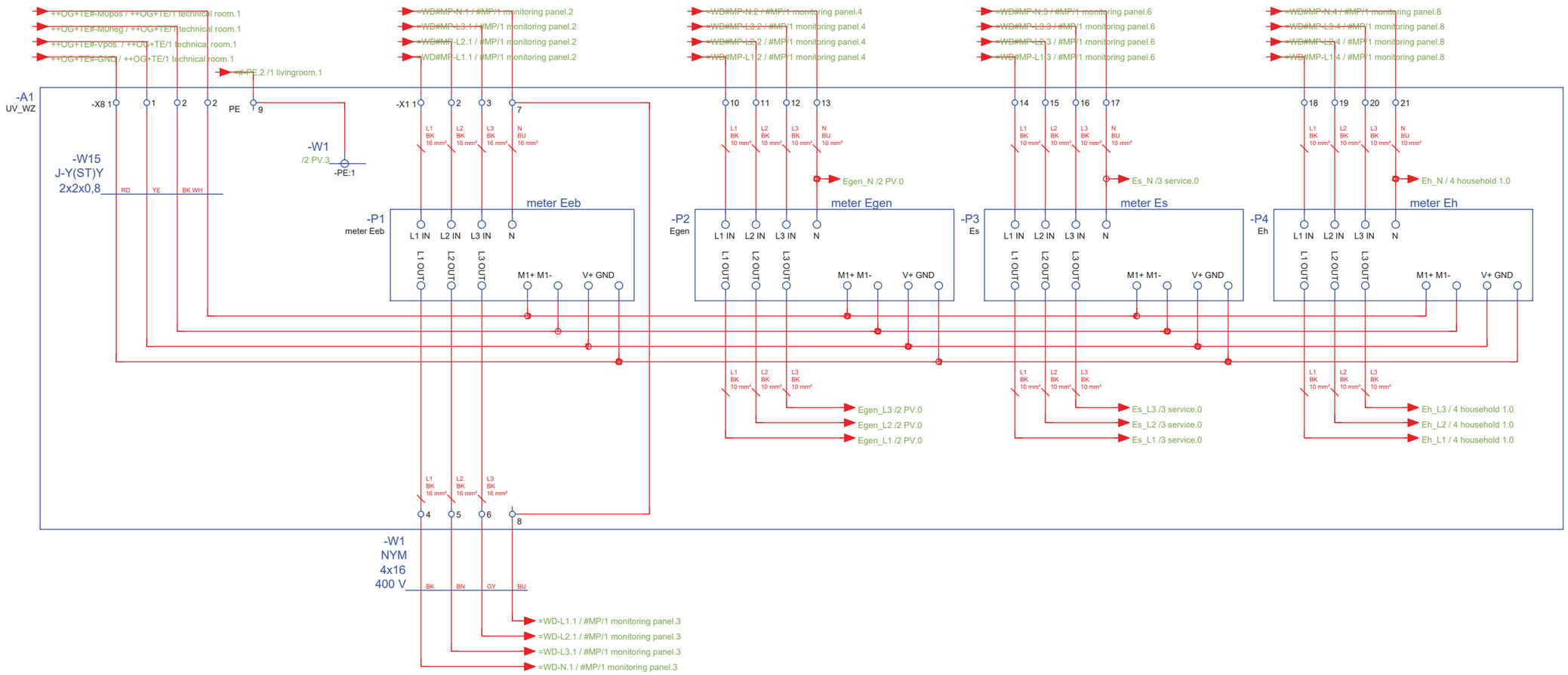

levelup

solar decathlon europe 21-22
WUPPERTAL GERMANY

Scale
n.t.s. (A3 420x297)

Phase
D#6

Drawing Content-HDU
AC Circuit layout

EL-6012

livingroom - distribution
++EG+LI#UV_LI/PV

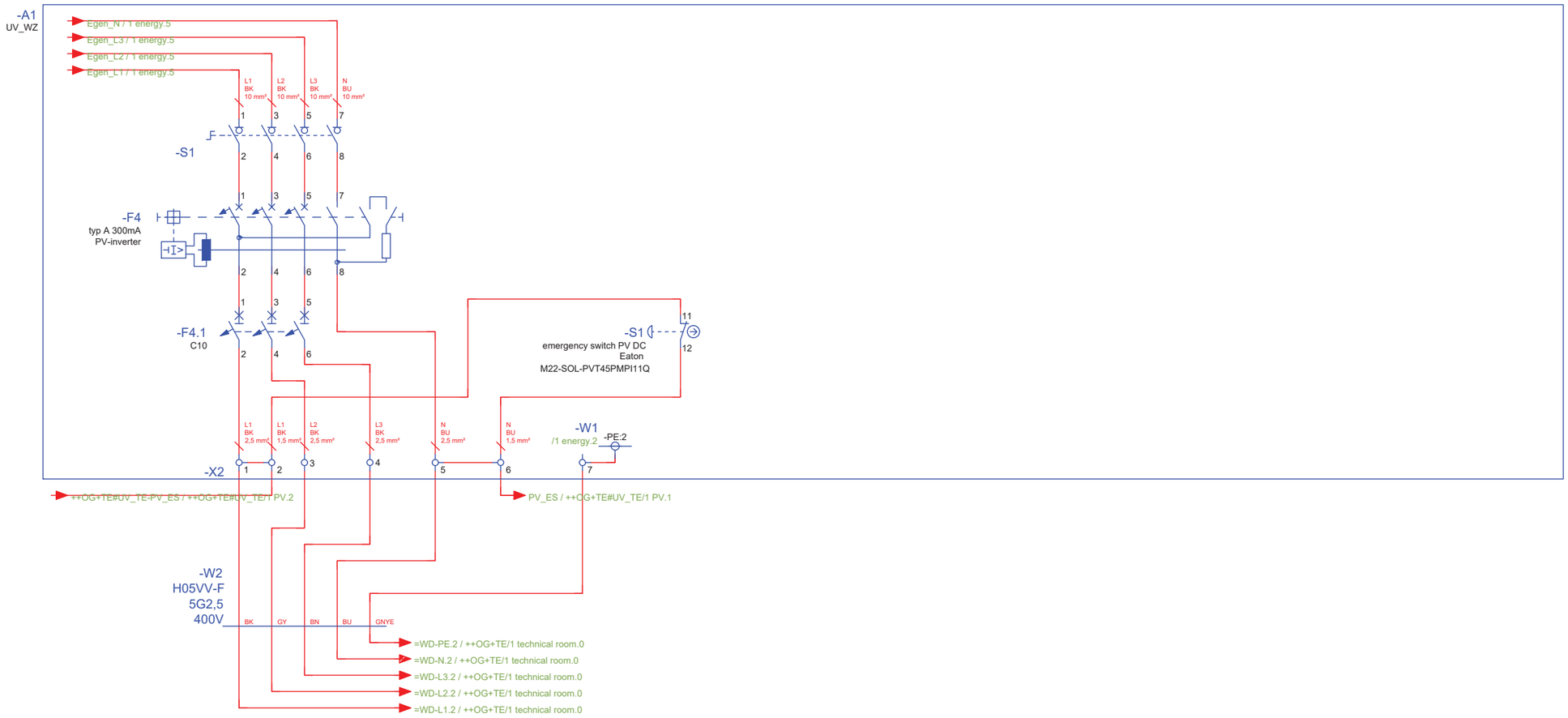

levelup

solar decathlon europe 21-22
WUPPERTAL GERMANY

Scale
n.t.s. (A3 420x297)

Phase
D#6

Drawing Content-HDU
AC Circuit layout

EL-6013

livingroom - distribution
++EG+LI#UV_LI/service

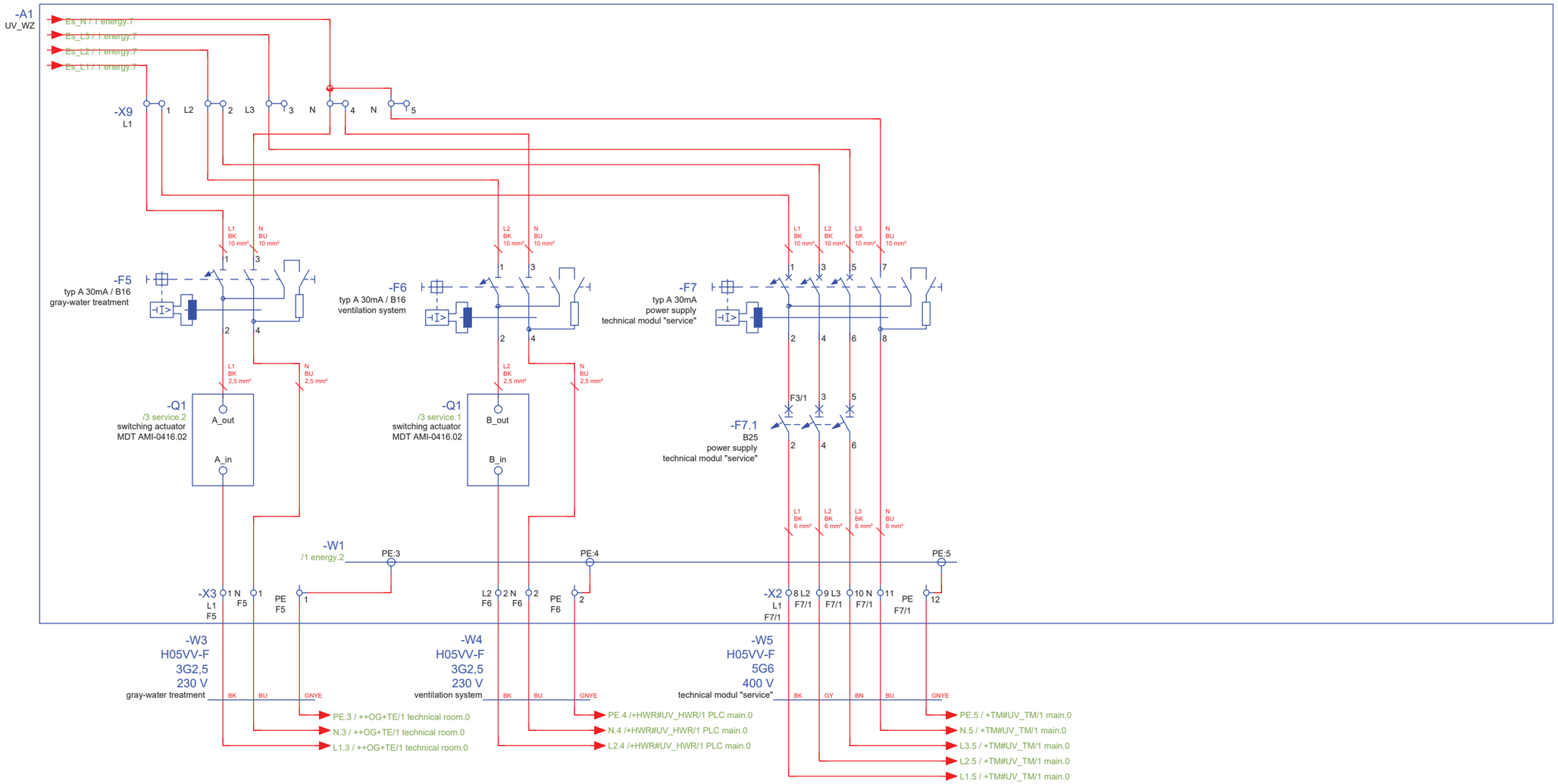

levelup

solar decathlon 21-22 europe
WUPPERTAL GERMANY

Scale
n.t.s. (A3 420x297)

Phase
D#6

Drawing Content-HDU
AC Circuit layout

EL-6014

livingroom - distribution
++EG+LI#UV_LI/household 1

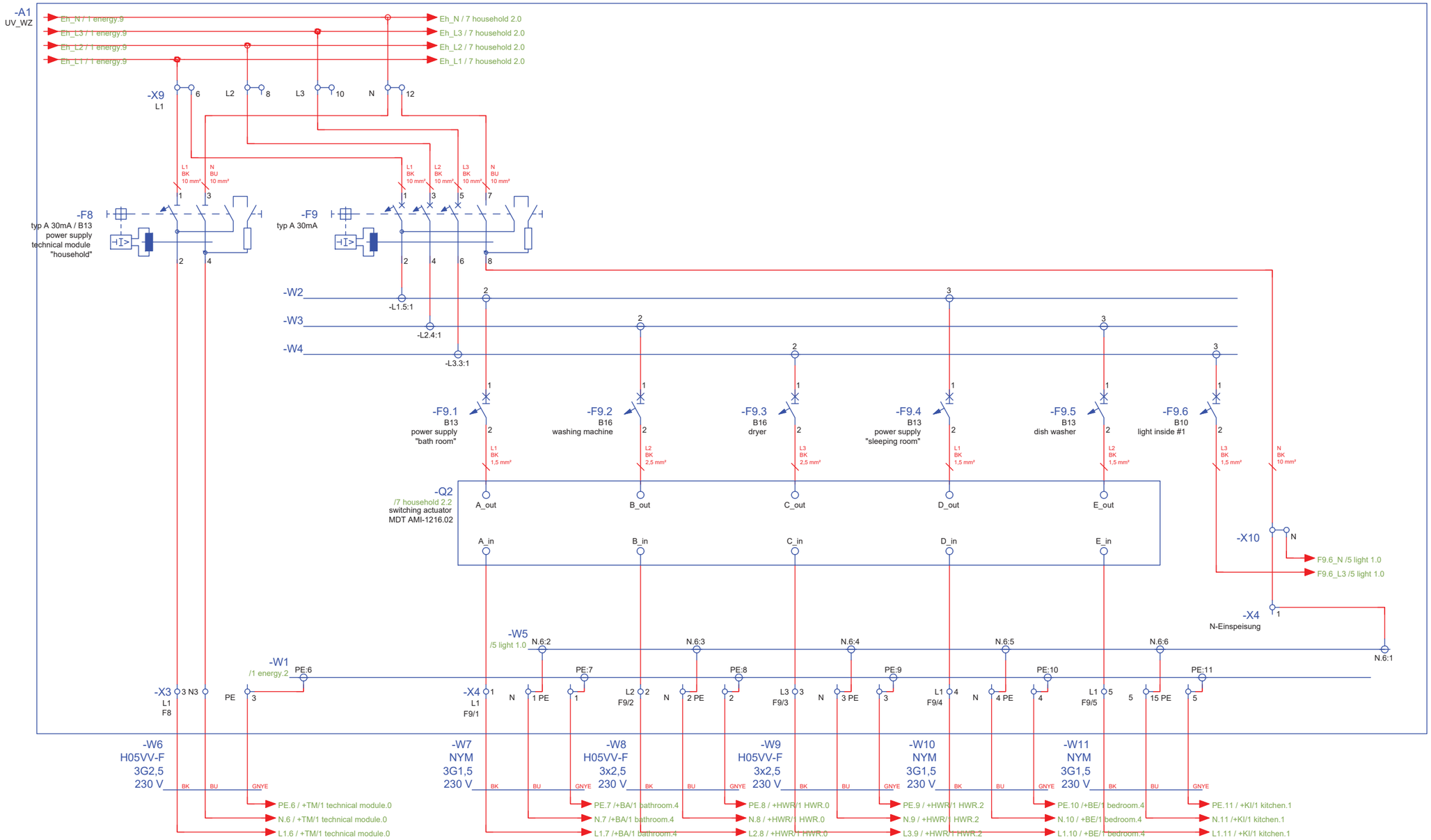

levelup

solar decathlon europe 21-22
WUPPERTAL GERMANY

Scale
n.t.s. (A3 420x297)

Phase
D#6

Drawing Content-HDU
AC Circuit layout

EL-6015

livingroom - distribution
++EG+LI#UV_LI/light 1

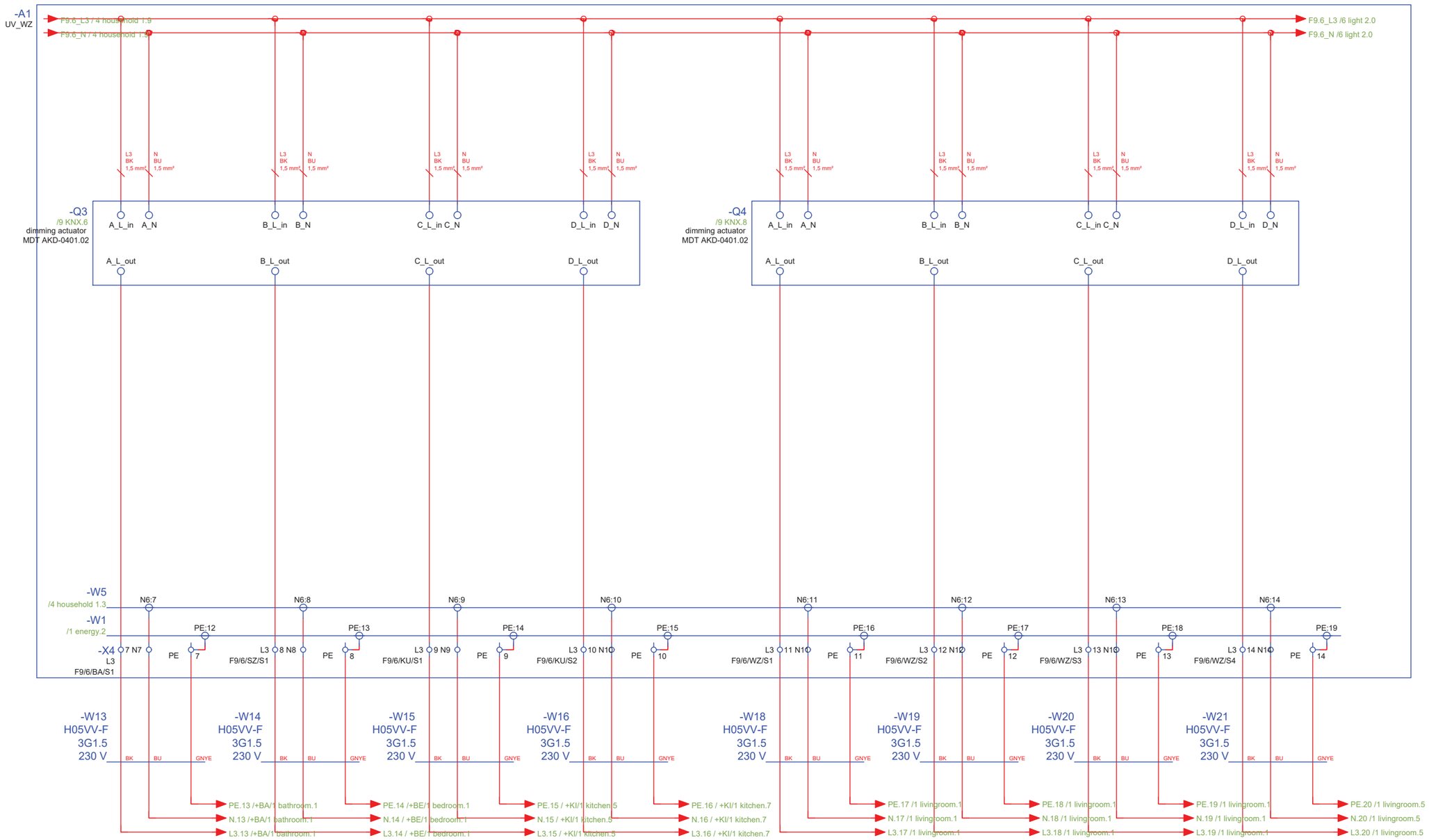

levelup

solar decathlon europe 21-22
WUPPERTAL GERMANY

Scale
n.t.s. (A3 420x297)

Phase
D#6

Drawing Content-HDU
AC Circuit layout

EL-6016

livingroom - distribution
++EG+LI#UV_LI/light 2

levelup

solar decathlon 21-22 europe
WUPPERTAL GERMANY

Scale
n.t.s. (A3 420x297)

Phase
D#6

Drawing Content-HDU
AC Circuit layout

EL-6017

livingroom - distribution
++EG+LI#UV_LI/household 2

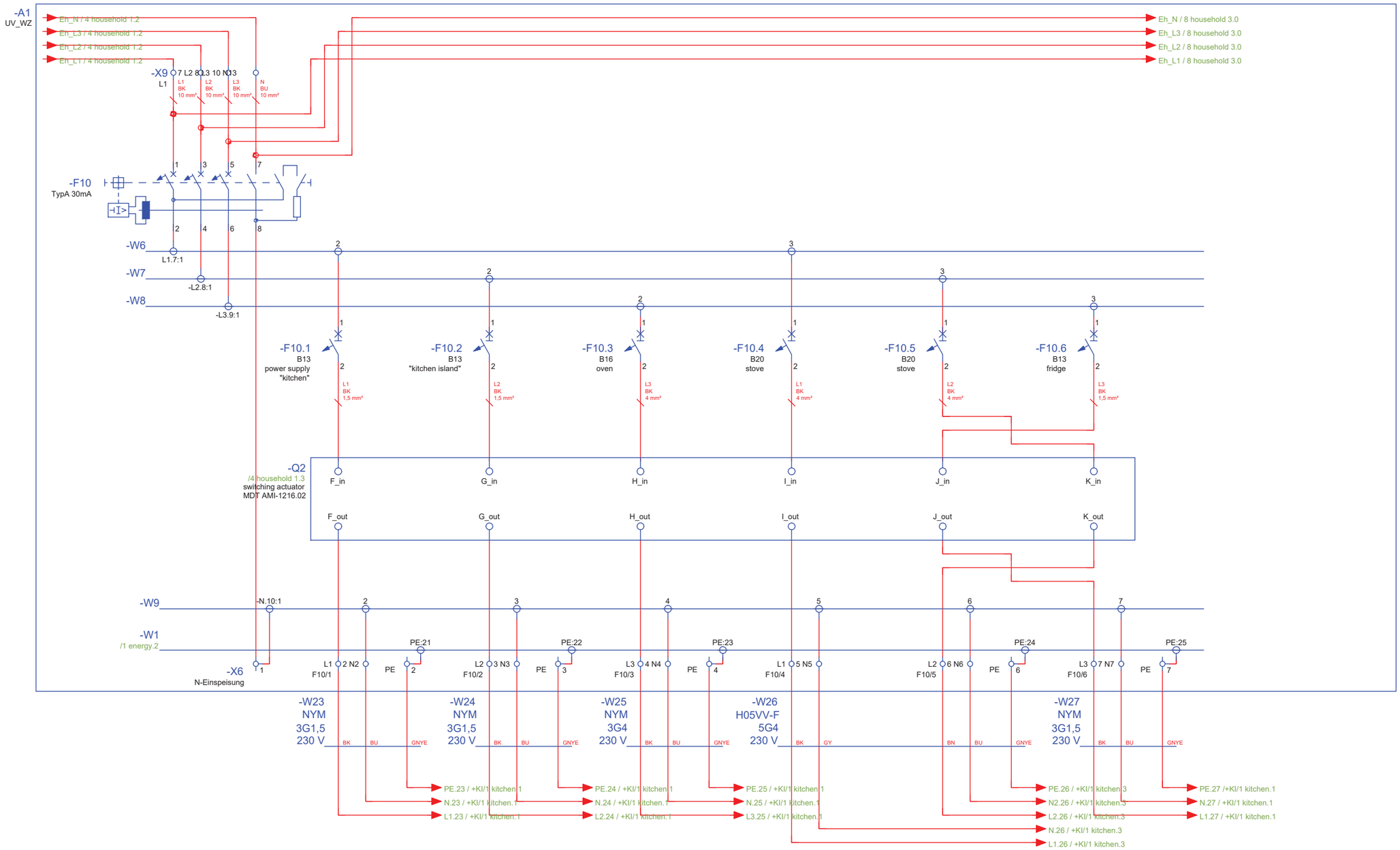

levelup

solar decathlon europe 21-22
WUPPERTAL GERMANY

Scale
n.t.s. (A3 420x297)

Phase
D#6

Drawing Content-HDU
AC Circuit layout

EL-6018

livingroom - distribution
++EG+LI#UV_LI/household 3

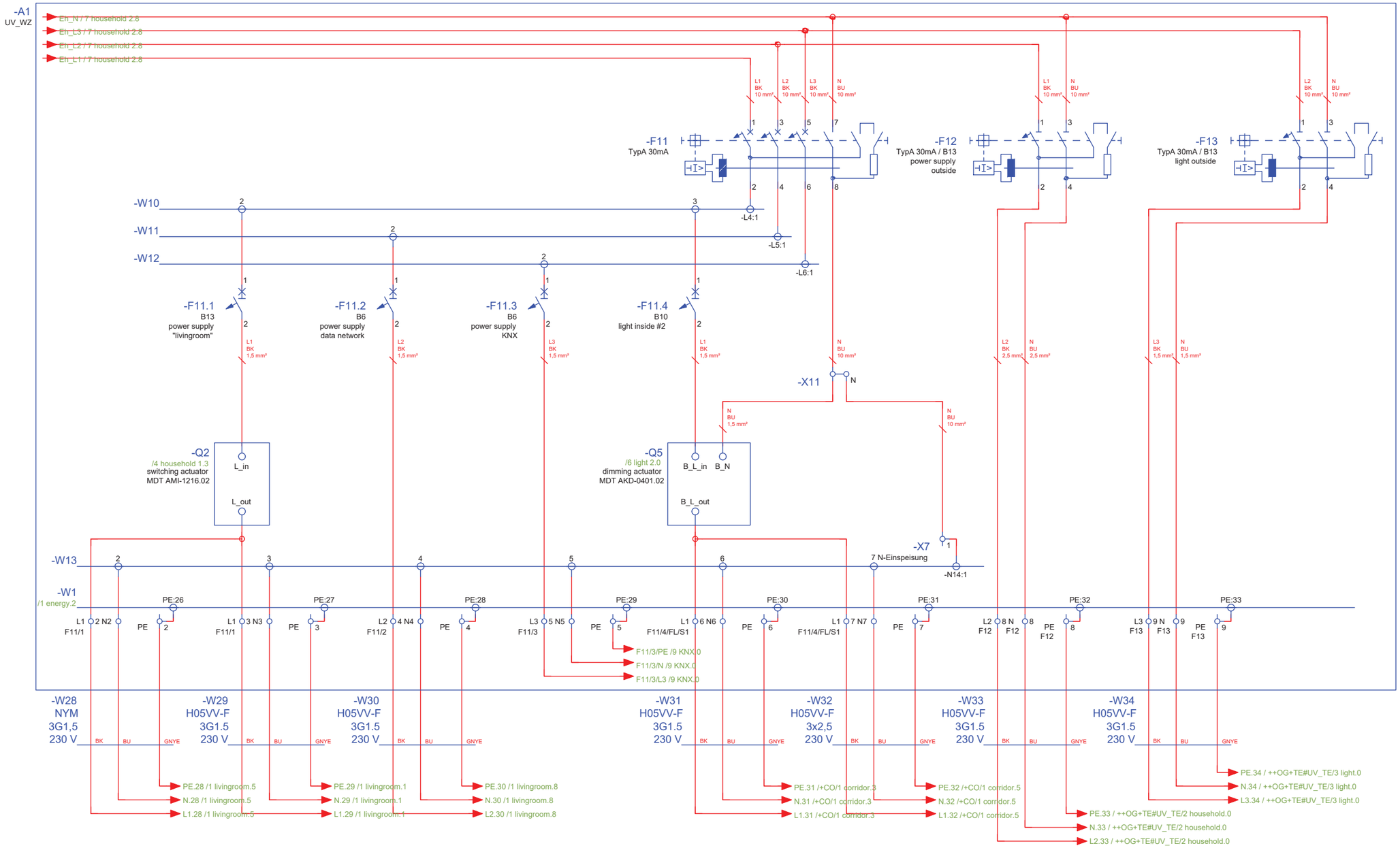

levelup

solar decathlon europe 21-22
WUPPERTAL GERMANY

Scale
n.t.s. (A3 420x297)

Phase
D#6

Drawing Content-HDU
AC Circuit layout

EL-6019

bedroom
++EG+BE

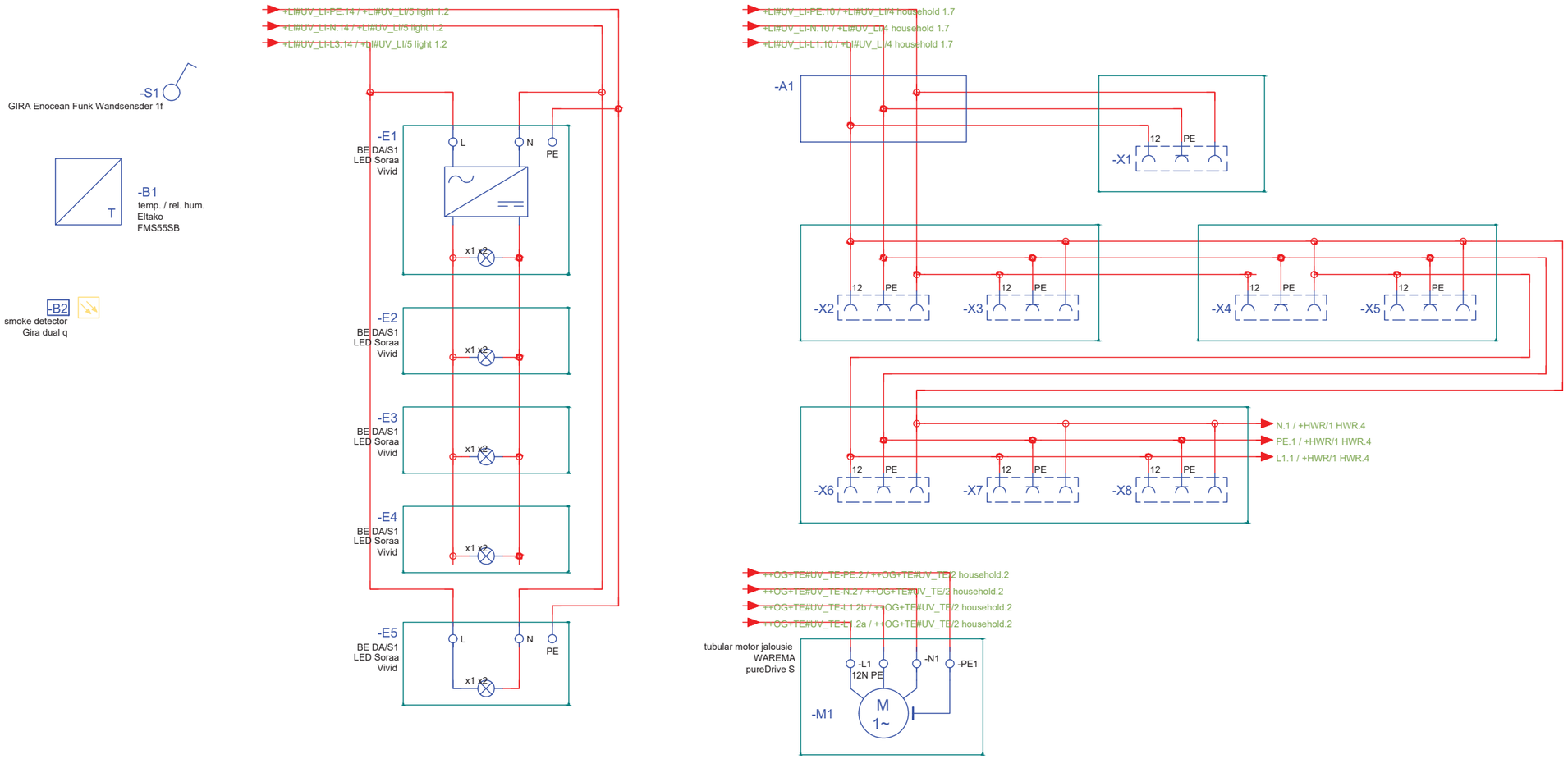

levelup

solar decathlon europe 21-22
WUPPERTAL GERMANY

General	GE
Architecture	AR
Interiors	IN
Structural	ST
Plumbing	PL
Solar Water Heating	SW
Mechanical	ME
Electrical	**EL**
Photovoltaic System	PV
Teleco. & Build. Aut. System	BAS
Instrumentation Drawings	ID
Site Operations	SO
Fire Protection	FP
Health & Safety	HS
Public Tour	PT

Scale
n.t.s. (A3 420x297)

Phase
D#6

Drawing Content-HDU
AC Circuit layout

EL-6020

kitchen
++EG+KI

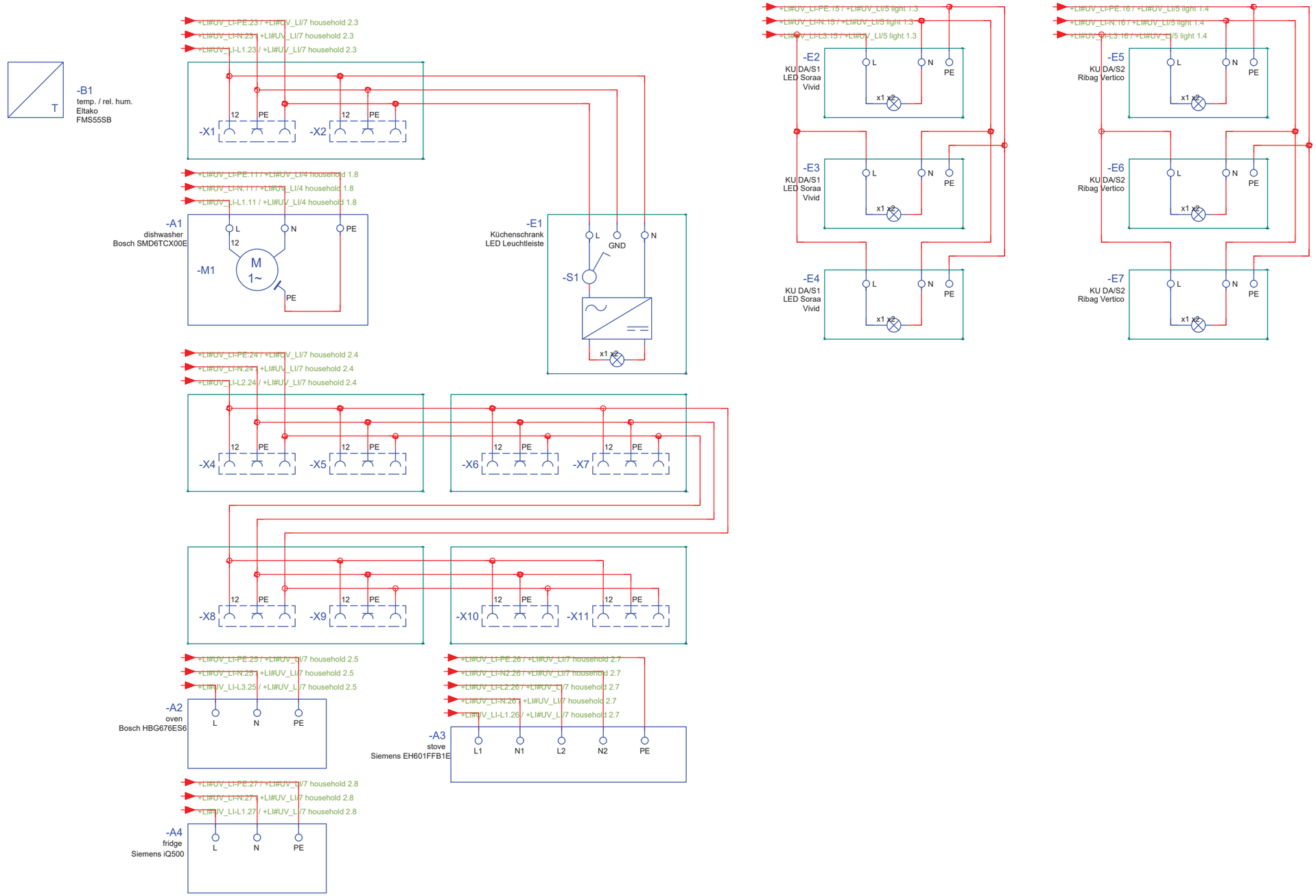

levelup

solar decathlon europe 21-22
WUPPERTAL GERMANY

Scale
n.t.s. (A3 420x297)

Phase
D#6

Drawing Content-HDU
AC Circuit layout

EL-6021

corridor
++EG+CO

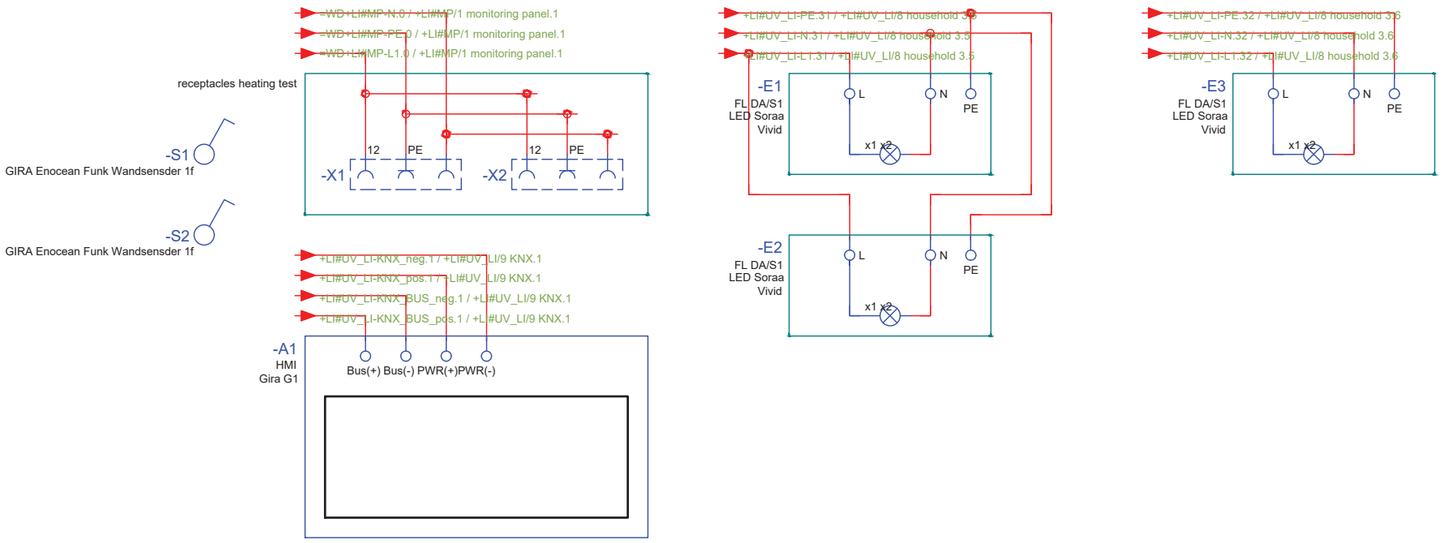

levelup

solar decathlon europe 21-22
WUPPERTAL GERMANY

Scale
n.t.s. (A3 420x297)

Phase
D#6

Drawing Content-HDU
AC Circuit layout

EL-6022

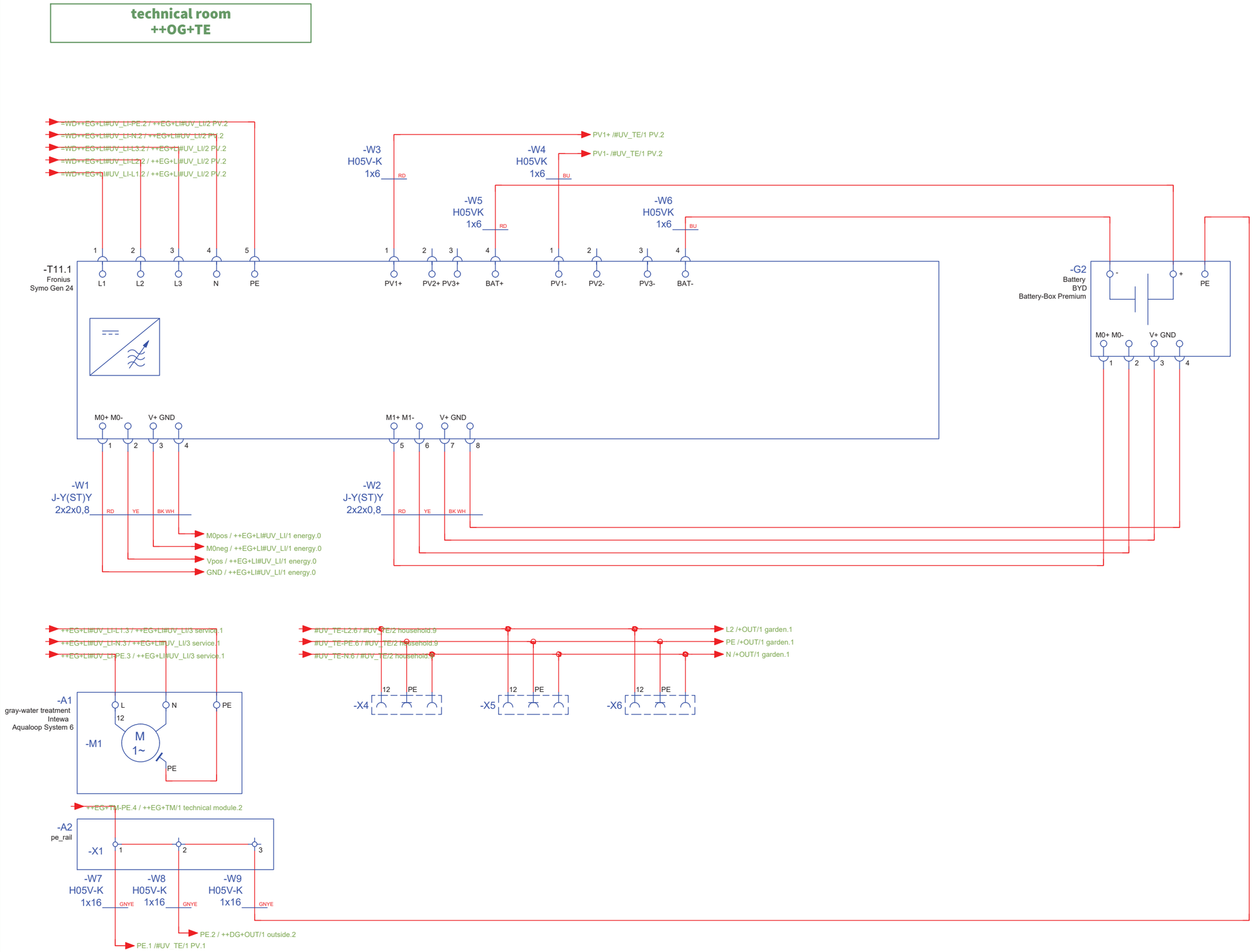

levelup

solar decathlon europe 21-22
WUPPERTAL GERMANY

Scale
n.t.s. (A3 420x297)

Phase
D#6

Drawing Content-HDU
AC Circuit layout

EL-6023

technical room - distribution
++OG+TE#UV_TE/PV

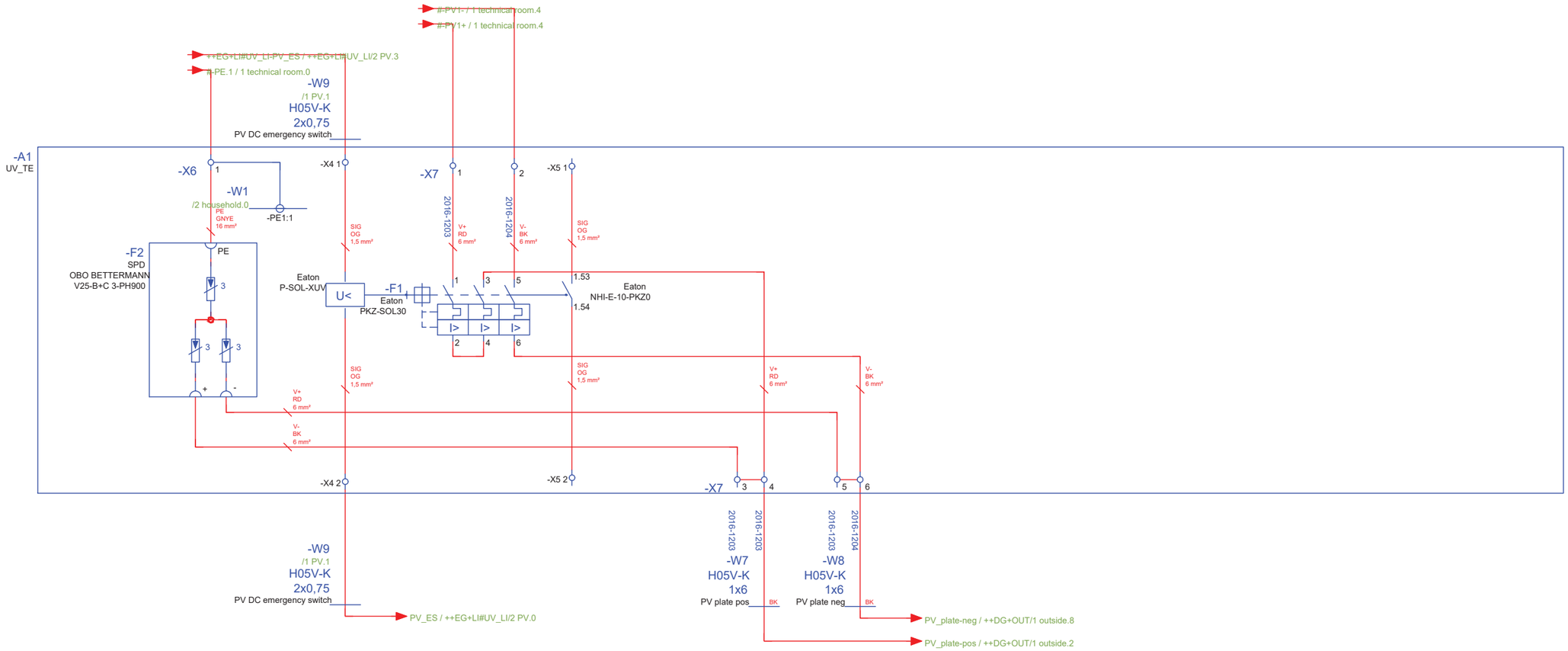

levelup

solar decathlon europe 21-22
WUPPERTAL GERMANY

Scale
n.t.s. (A3 420x297)

Phase
D#6

Drawing Content-HDU
AC Circuit layout

EL-6024

technical room - distribution
++OG+TE#UV_TE/household

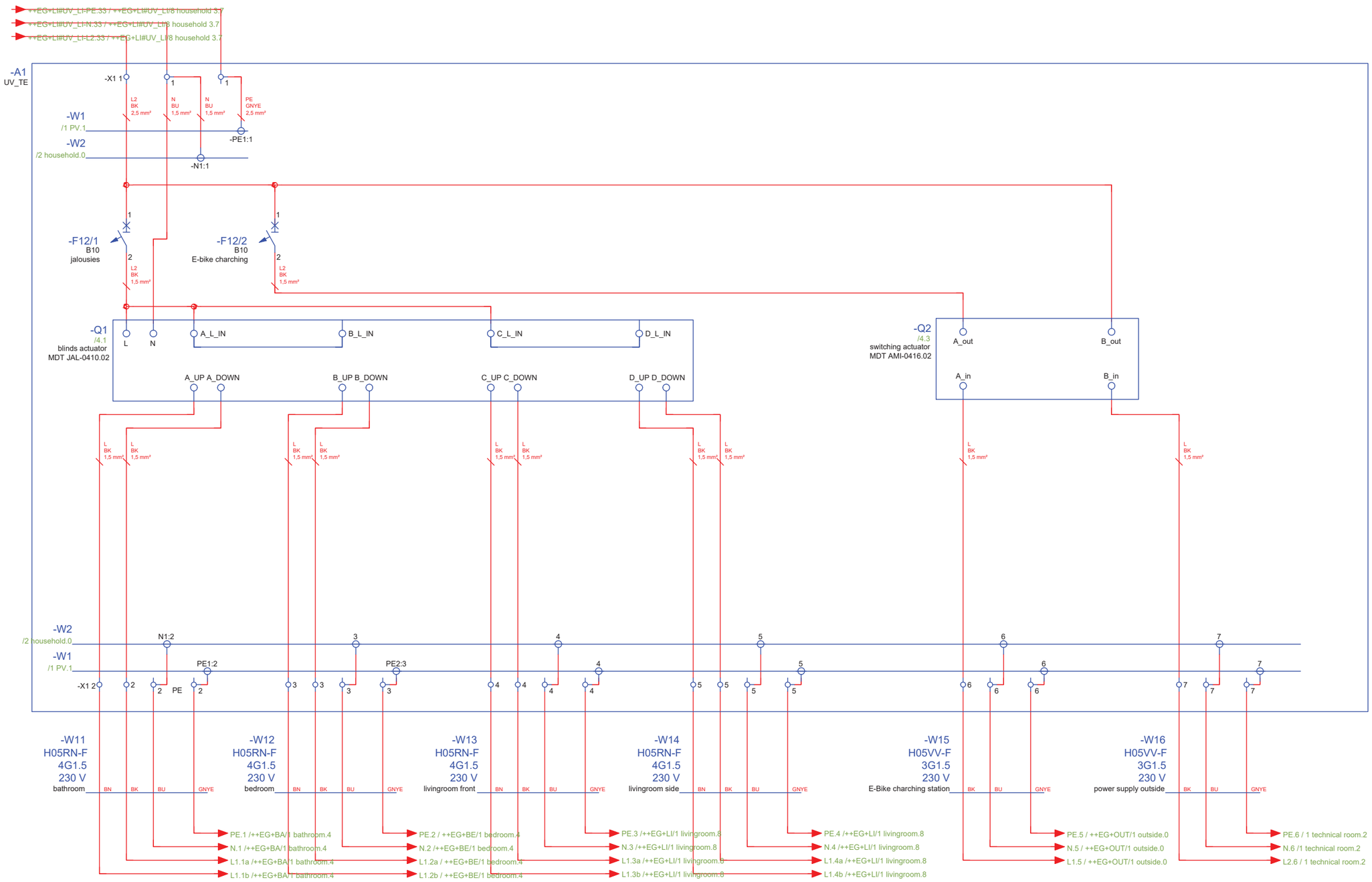

levelup

solar decathlon europe 21-22
WUPPERTAL GERMANY

Scale
n.t.s. (A3 420x297)

Phase
D#6

Drawing Content-HDU
AC Circuit layout

EL-6025

technical room - distribution
++OG+TE#UV_TE/light

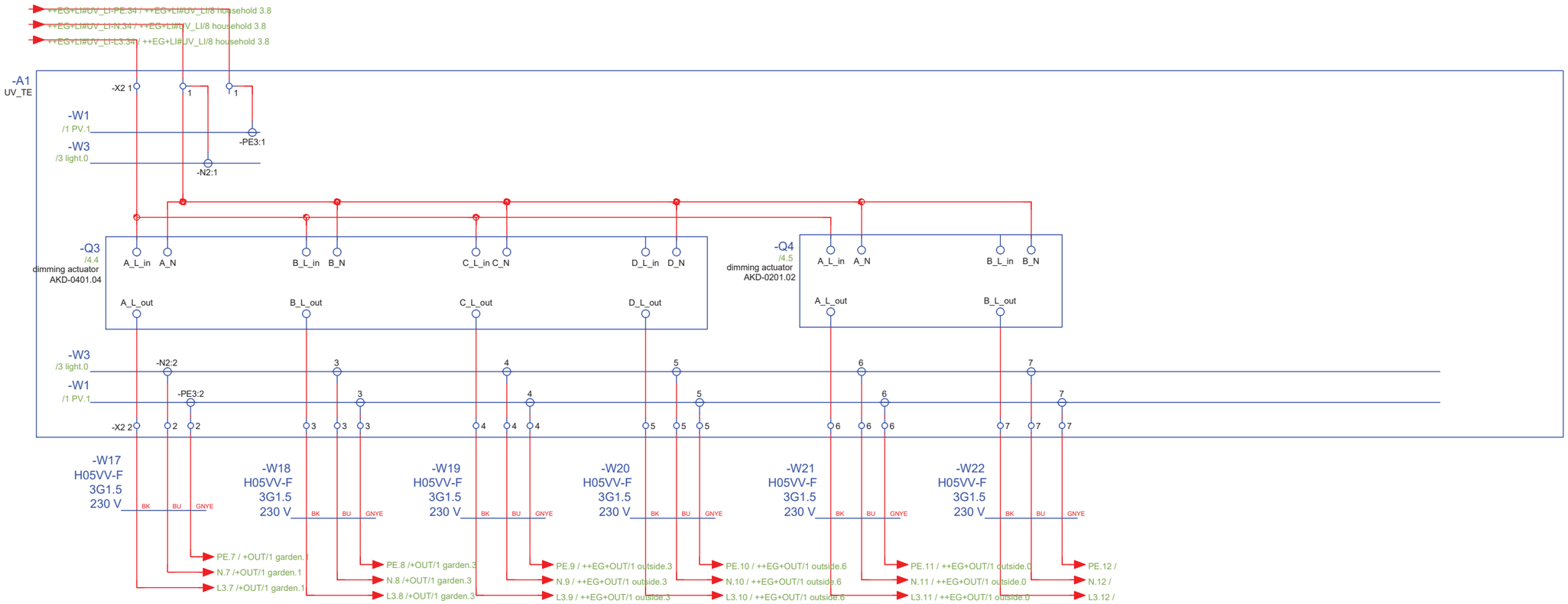

levelup

solar decathlon 21-22 europe
WUPPERTAL GERMANY

Scale
n.t.s. (A3 420x297)

Phase
D#6

Drawing Content-HDU
AC Circuit layout

EL-6026

garden
++OG+OUT

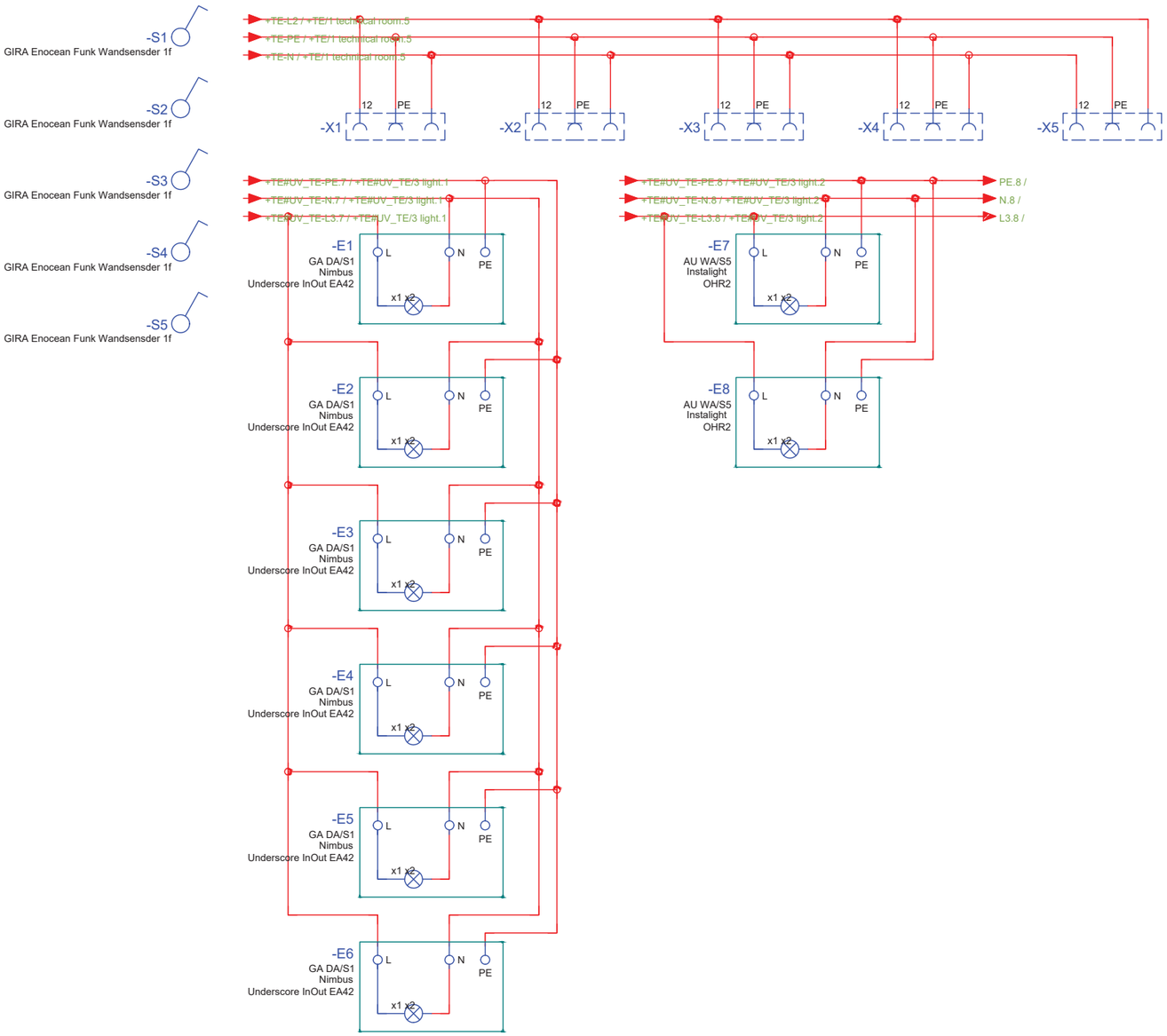

levelup

solar decathlon europe 21-22
WUPPERTAL GERMANY

Scale
n.t.s. (A3 420x297)

Phase
D#6

Drawing Content-HDU
AC Circuit layout

EL-6027

roof
++DG+OUT

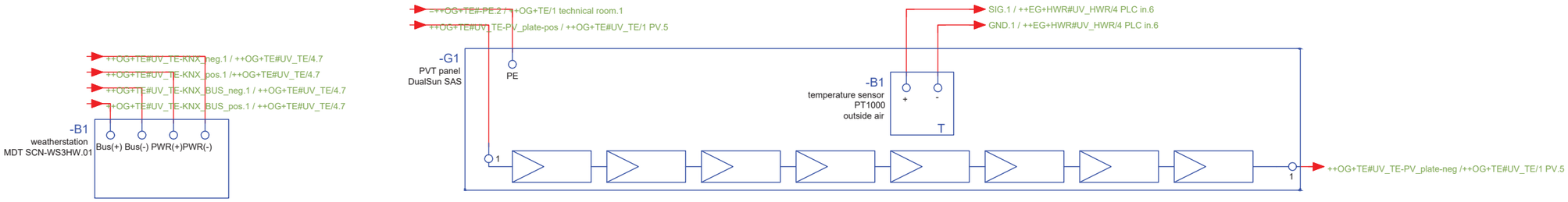

levelup

solar decathlon europe 21-22
WUPPERTAL GERMANY

Scale
n.t.s. (A3 420x297)

Phase
D#6

Drawing Content-HDU
AC Circuit layout

EL-6028

Photovoltaik System (PV)

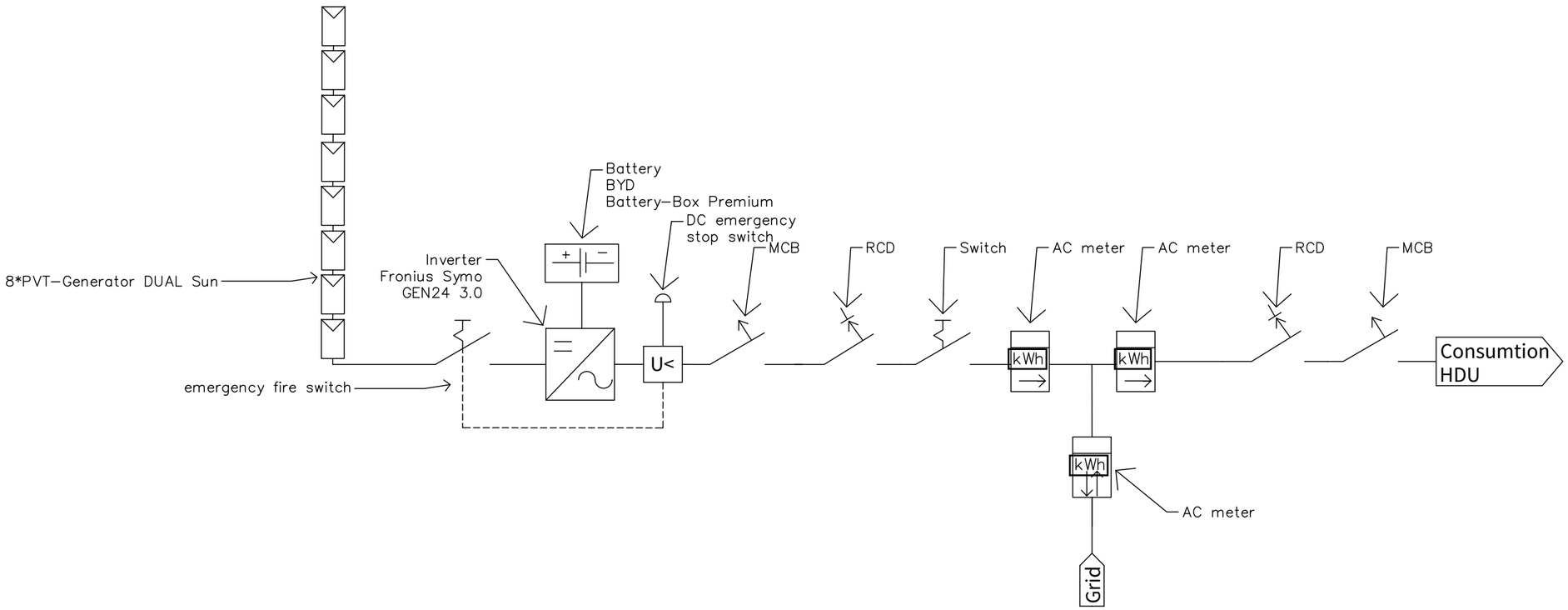

levelup

solar decathlon europe 21-22
WUPPERTAL GERMANY

Scale
n.t.s. (A3 420x297)

Phase
D#6

Drawing Content-HDU
Conceptual Drawings

PV-0001

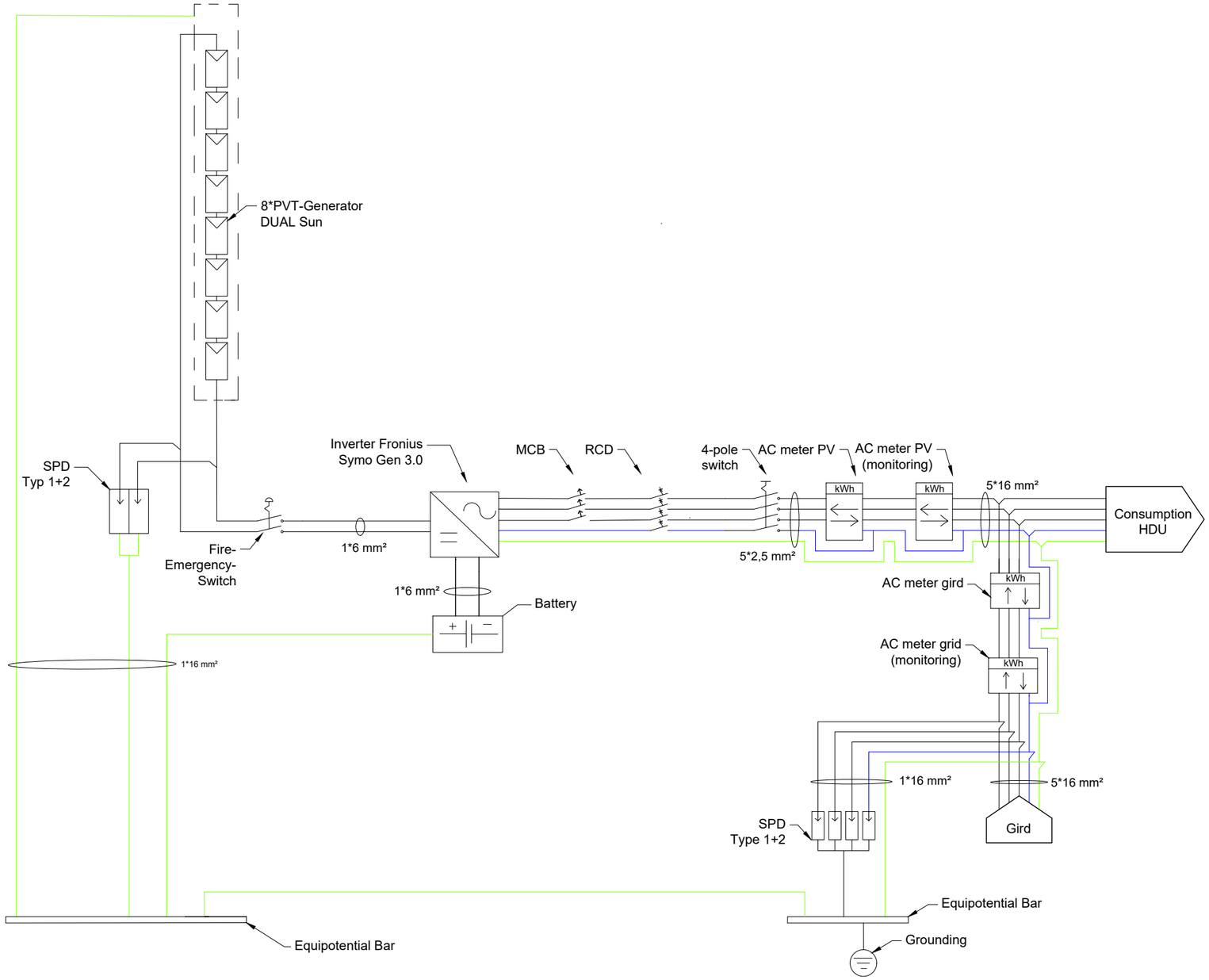

levelup

solar decathlon europe 21-22
WUPPERTAL GERMANY

Scale
n.t.s. (A3 420x297)

Phase
D#6

Drawing Content-HDU
Photovoltaic system general

PV-1001

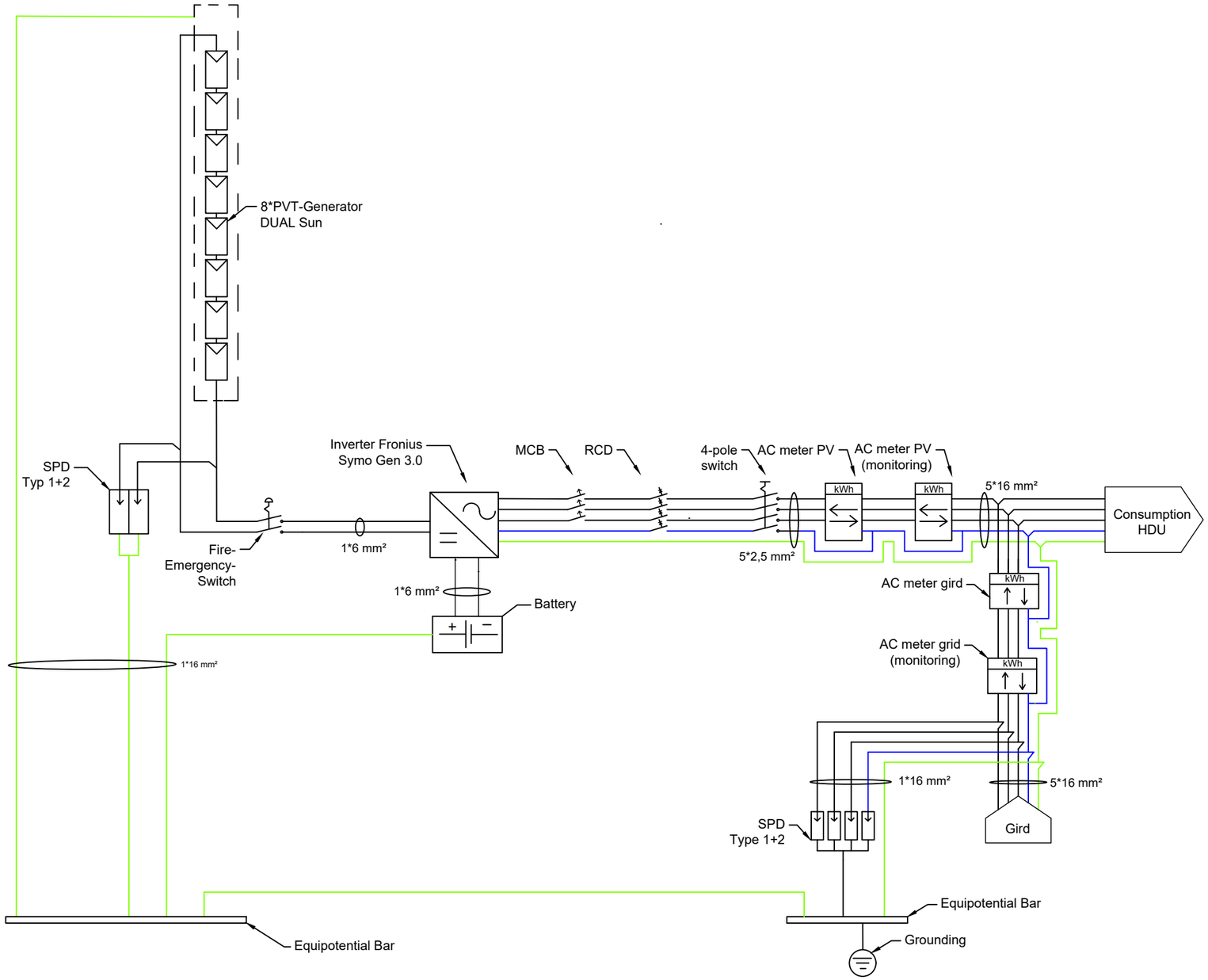

levelup

solar decathlon europe 21-22
WUPPERTAL GERMANY

Scale
n.t.s. (A3 420x297)

Phase
D#6

Drawing Content-HDU
Photovoltaic system
DC circuits

PV-2001

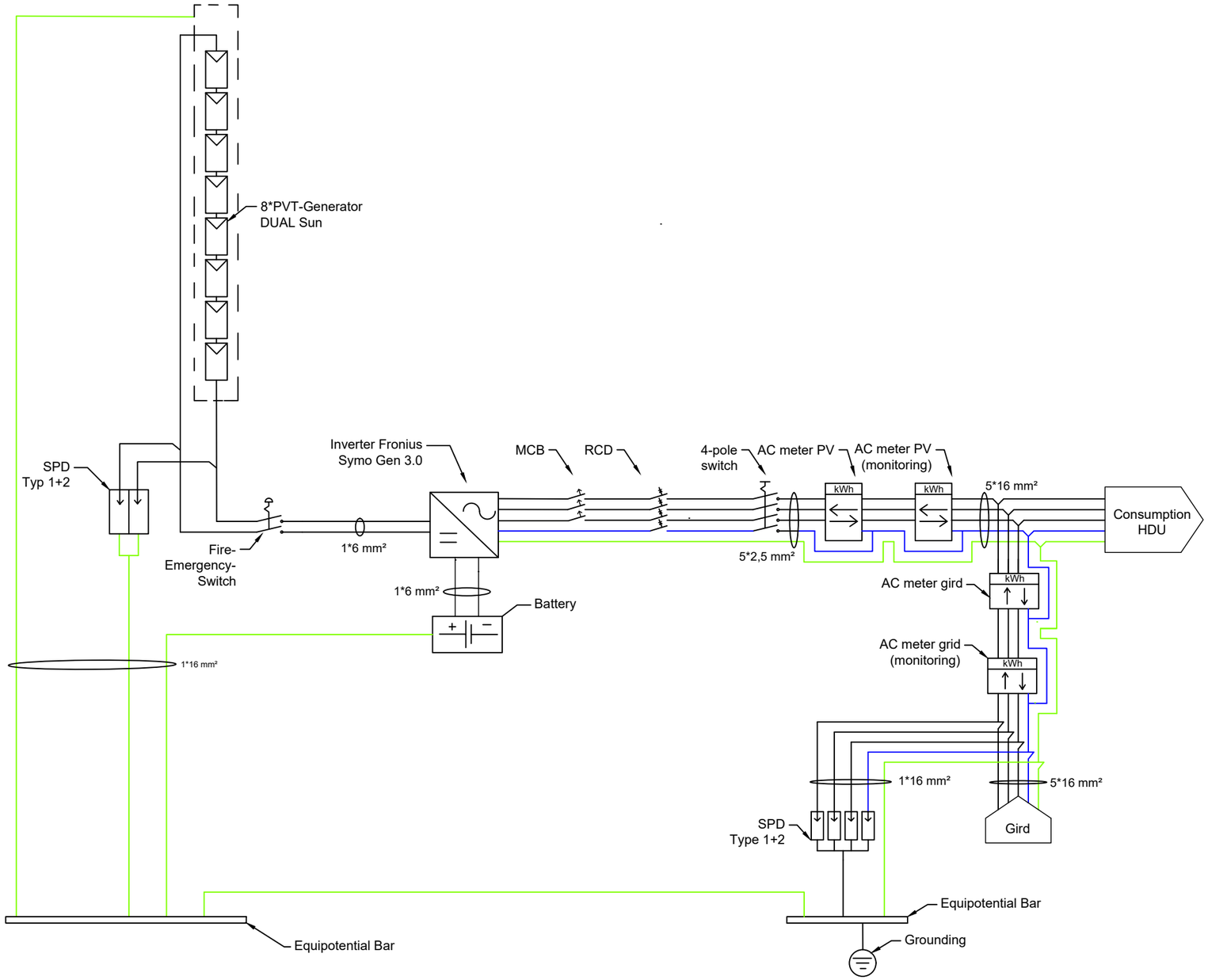

levelup

solar decathlon europe 21-22
WUPPERTAL GERMANY

Scale
n.t.s. (A3 420x297)

Phase
D#6

Drawing Content-HDU
Photovoltaic system
AC circuits

PV-3001

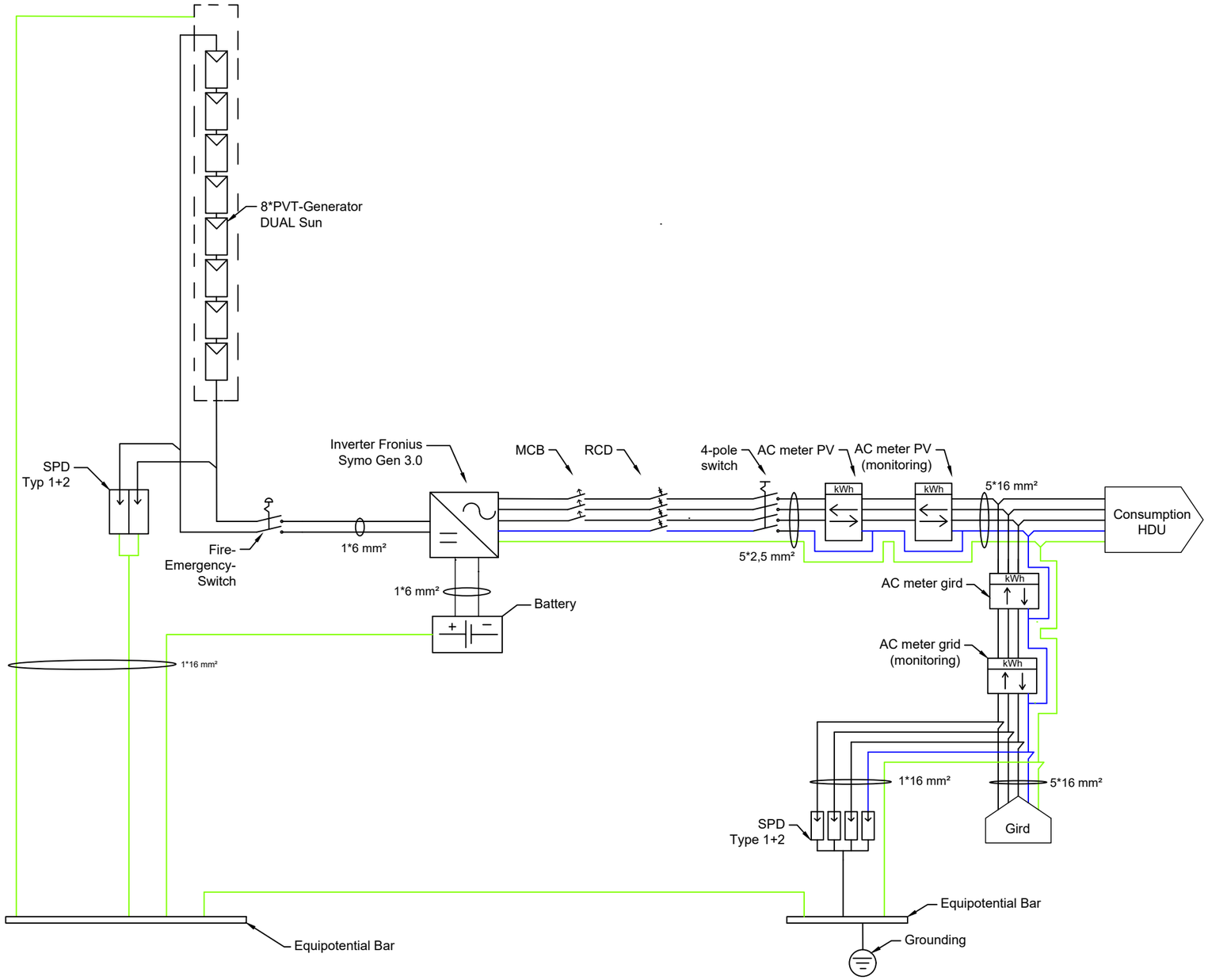

levelup

solar decathlon europe 21-22
WUPPERTAL GERMANY

Scale
n.t.s. (A3 420x297)

Phase
D#6

Drawing Content-HDU
Photovoltaic system grounding system

PV-4001

Telecommunications and Building Management System (BMS)

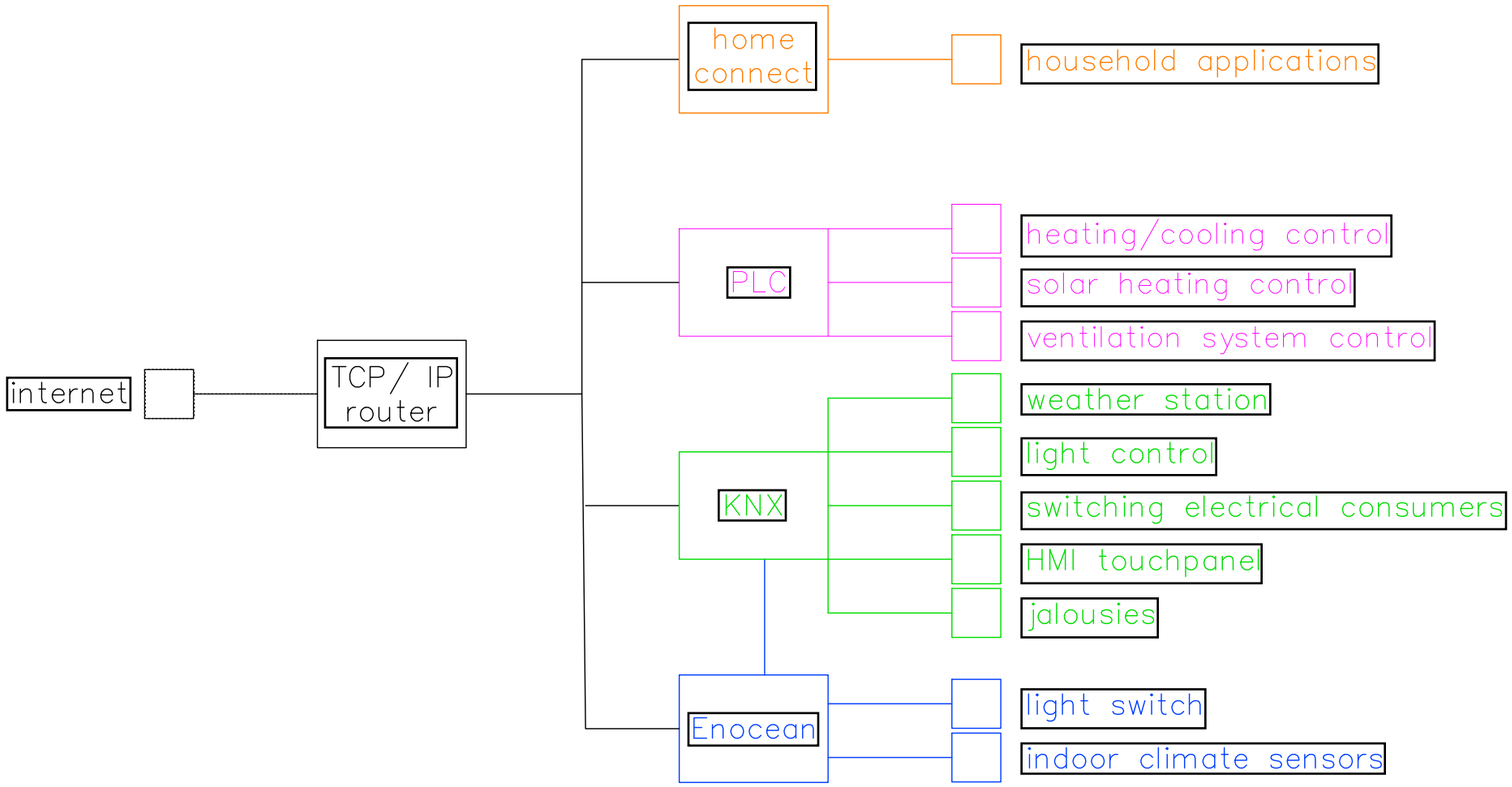

levelup

solar decathlon 21»22 europe
WUPPERTAL GERMANY

Scale
n.t.s. (A3 420x297)

Phase
D#6

Drawing Content-HDU
Conceptual Drawings

BMS-0001

technical modul
++EG+TM

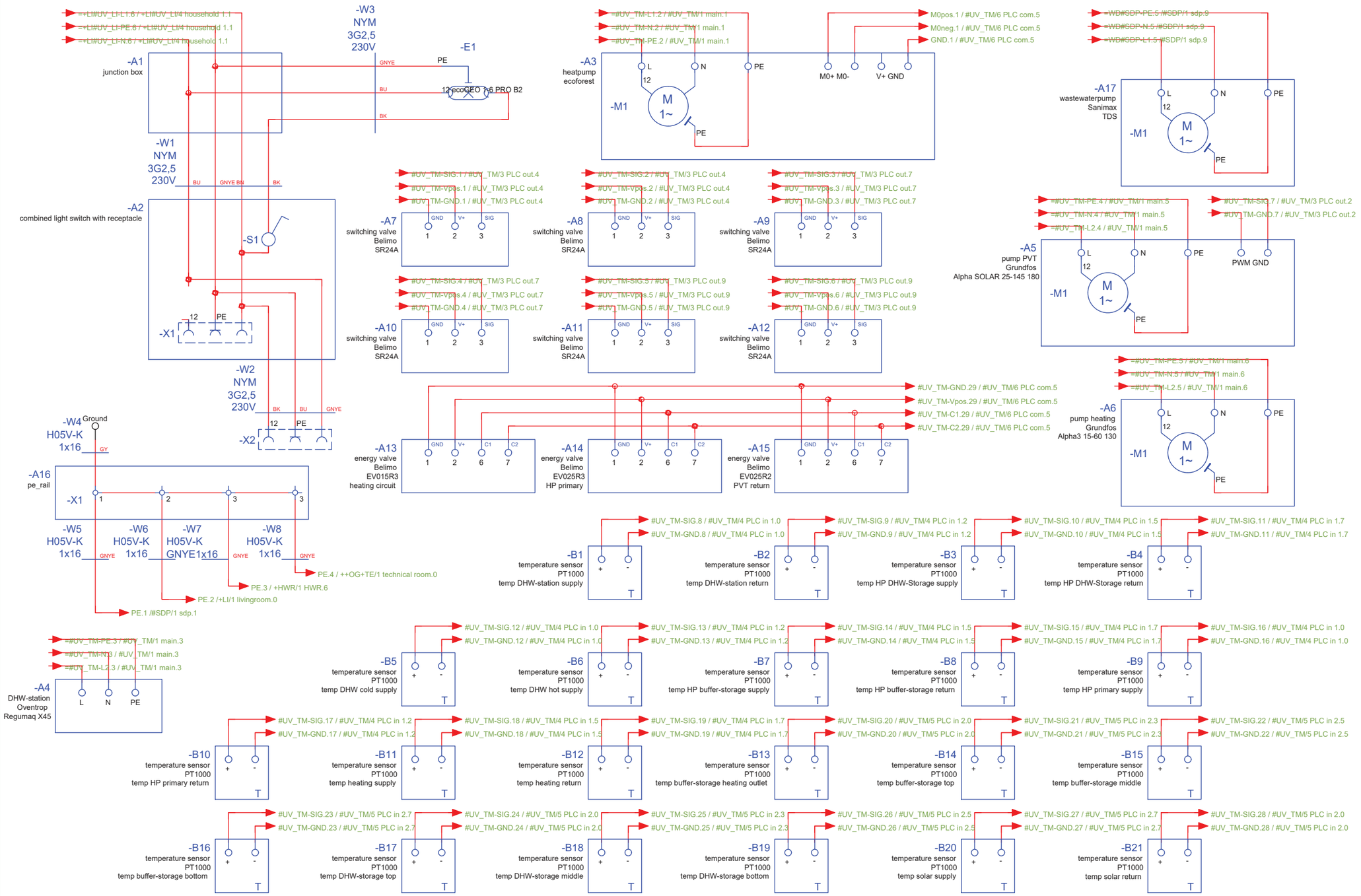

levelup

solar decathlon europe 21»22
WUPPERTAL GERMANY

Scale
n.t.s. (A3 420x297)

Phase
D#6

Drawing Content-HDU
Wiring Plan

BMS-1001

distriubition TM
++EG+TM#UV_TM/PLC_main

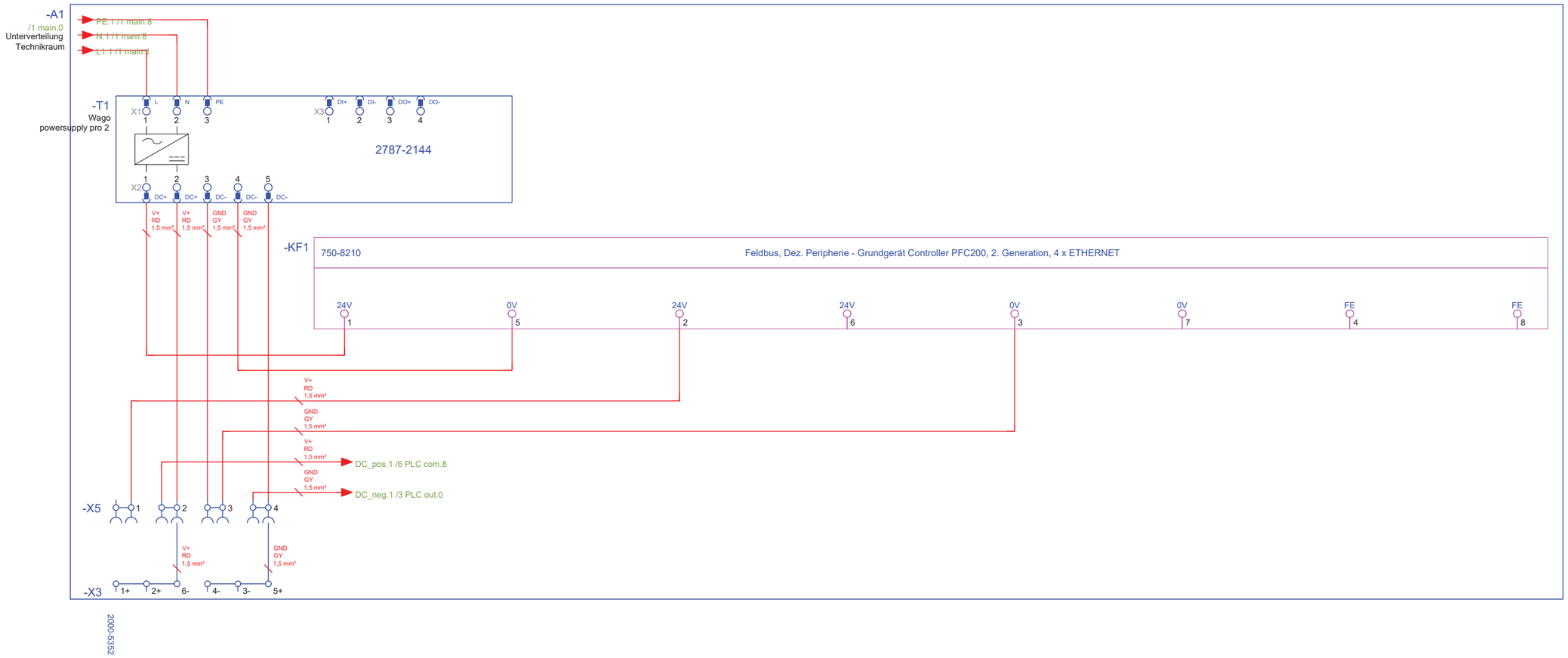

levelup

solar decathlon europe 21»22
WUPPERTAL GERMANY

General	GE
Architecture	AR
Interiors	IN
Structural	ST
Plumbing	PL
Solar Water Heating	SW
Mechanical	ME
Electrical	EL
Photovoltaic System	PV
Teleco. & Build. Aut. System	**BAS**
Instrumentation Drawings	ID
Site Operations	SO
Fire Protection	FP
Health & Safety	HS
Public Tour	PT

Scale
n.t.s. (A3 420x297)

Phase
D#6

Drawing Content-HDU
Wiring Plan

BMS-1002

technical modul - distriubition TM
++OG+TM#UV_TM/PLC_OUT

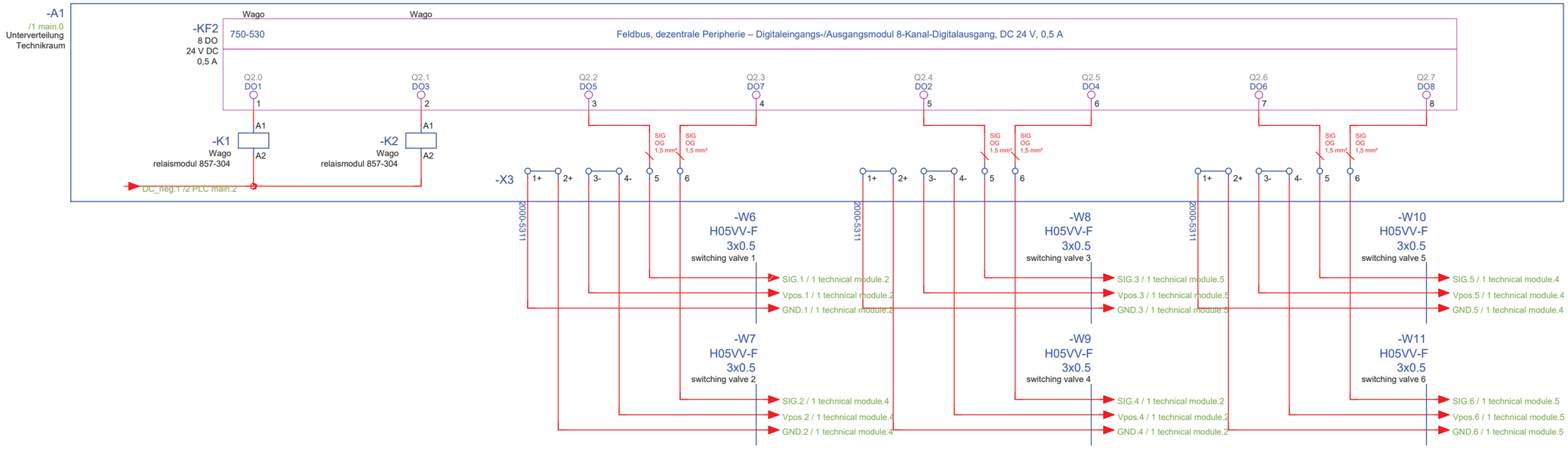

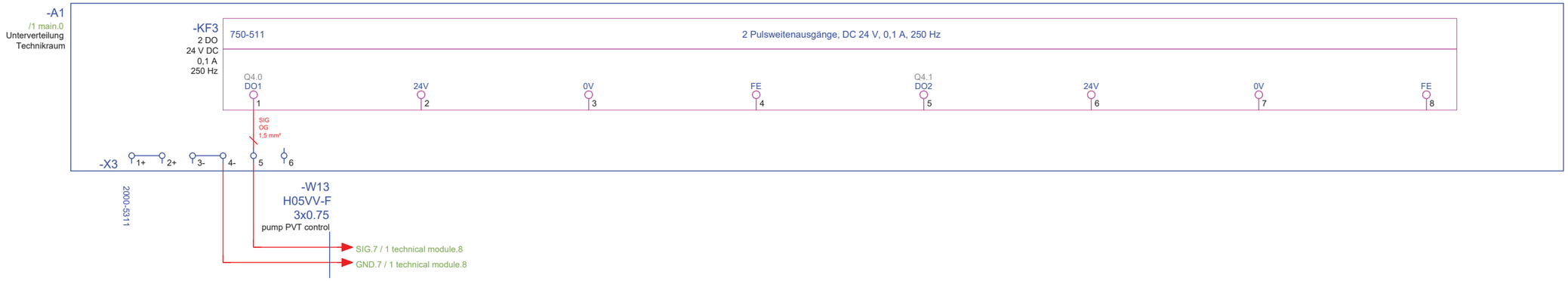

levelup

solar decathlon europe 21»22
WUPPERTAL GERMANY

Scale
n.t.s. (A3 420x297)

Phase
D#6

Drawing Content-HDU
Wiring Plan

BMS-1003

technical modul - distriubition TM
++OG+TM#UV_TM/PLC_IN 1

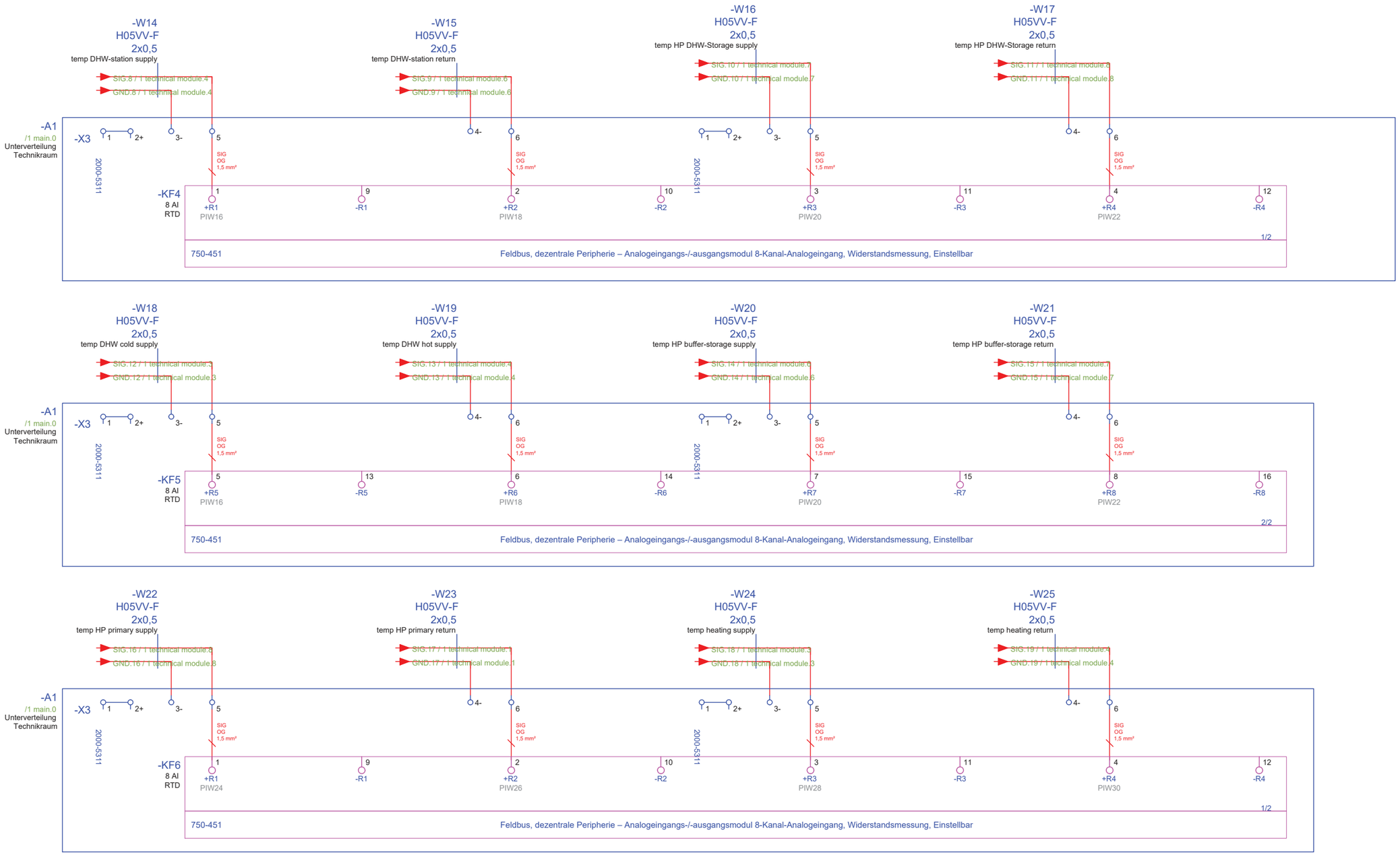

levelup

solar decathlon europe 21»22
WUPPERTAL GERMANY

Scale
n.t.s. (A3 420x297)

Phase
D#6

Drawing Content-HDU
Wiring Plan

BMS-1004

technical modul - distriubition TM
++OG+TM#UV_TM/PLC_IN 2

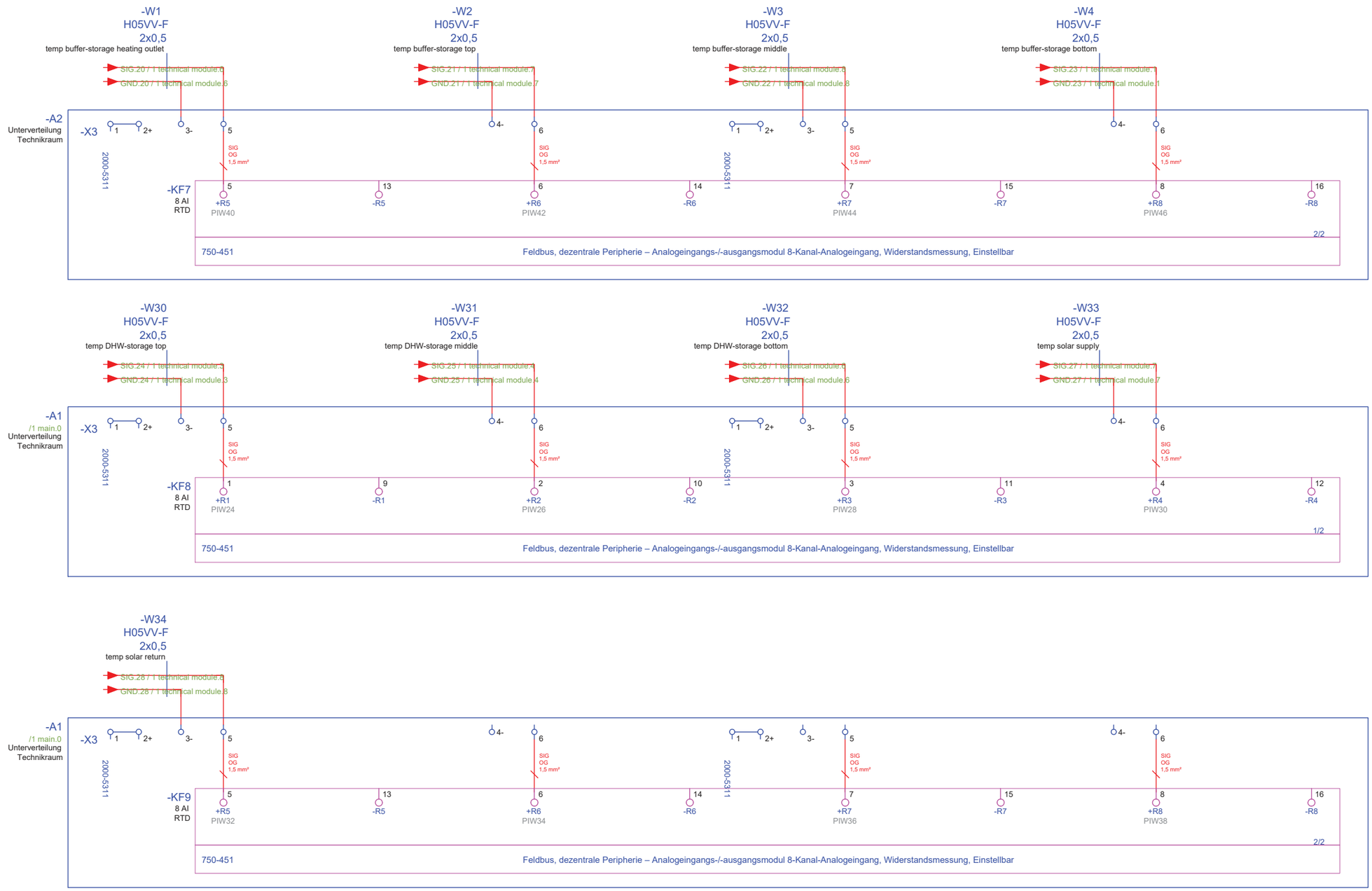

levelup

solar decathlon europe 21»22
WUPPERTAL GERMANY

Scale
n.t.s. (A3 420x297)

Phase
D#6

Drawing Content-HDU
Wiring Plan

BMS-1005

technical modul - distriubition TM
++OG+TM#UV_TM/PLC_COM

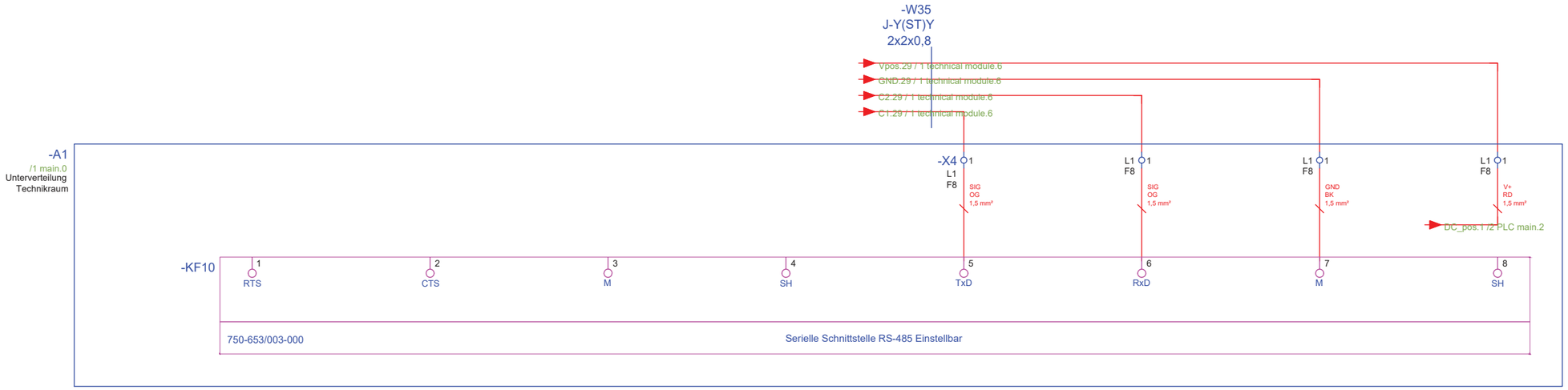

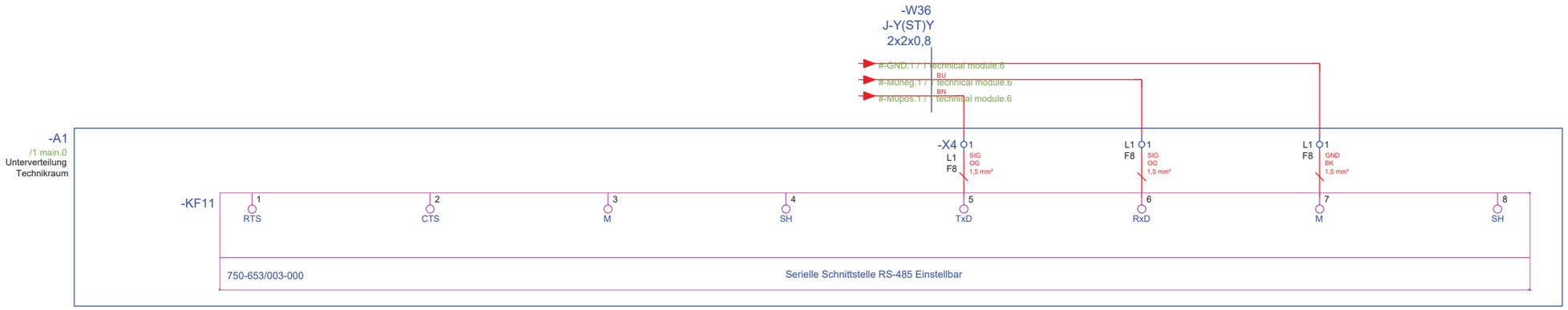

levelup

solar decathlon europe 21»22
WUPPERTAL GERMANY

General	GE
Architecture	AR
Interiors	IN
Structural	ST
Plumbing	PL
Solar Water Heating	SW
Mechanical	ME
Electrical	EL
Photovoltaic System	PV
Teleco. & Build. Aut. System	**BAS**
Instrumentation Drawings	ID
Site Operations	SO
Fire Protection	FP
Health & Safety	HS
Public Tour	PT

Scale
n.t.s. (A3 420x297)

Phase
D#6

Drawing Content-HDU
Wiring Plan

BMS-1006

utility room
++EG+HWR

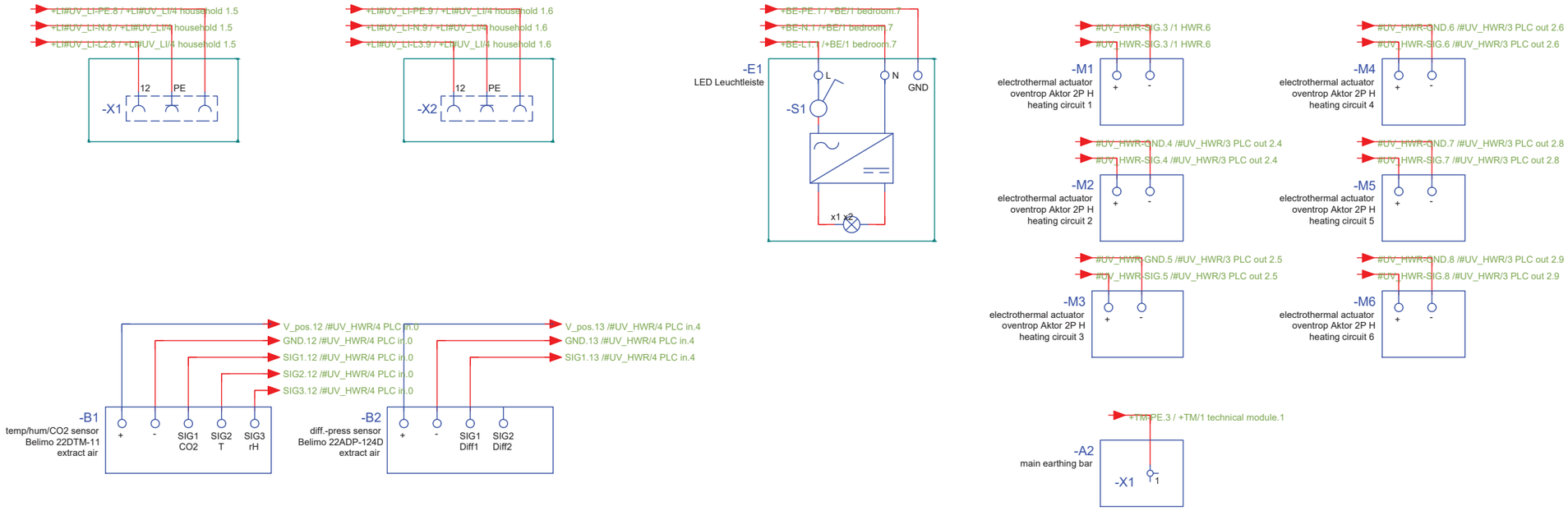

levelup

solar decathlon europe 21»22
WUPPERTAL GERMANY

General	GE
Architecture	AR
Interiors	IN
Structural	ST
Plumbing	PL
Solar Water Heating	SW
Mechanical	ME
Electrical	EL
Photovoltaic System	PV
Teleco. & Build. Aut. System	**BAS**
Instrumentation Drawings	ID
Site Operations	SO
Fire Protection	FP
Health & Safety	HS
Public Tour	PT

Scale
n.t.s. (A3 420x297)

Phase
D#6

Drawing Content-HDU
Wiring Plan

BMS-1007

utility room
++EG+HWR#UV_HWR/PLC_main

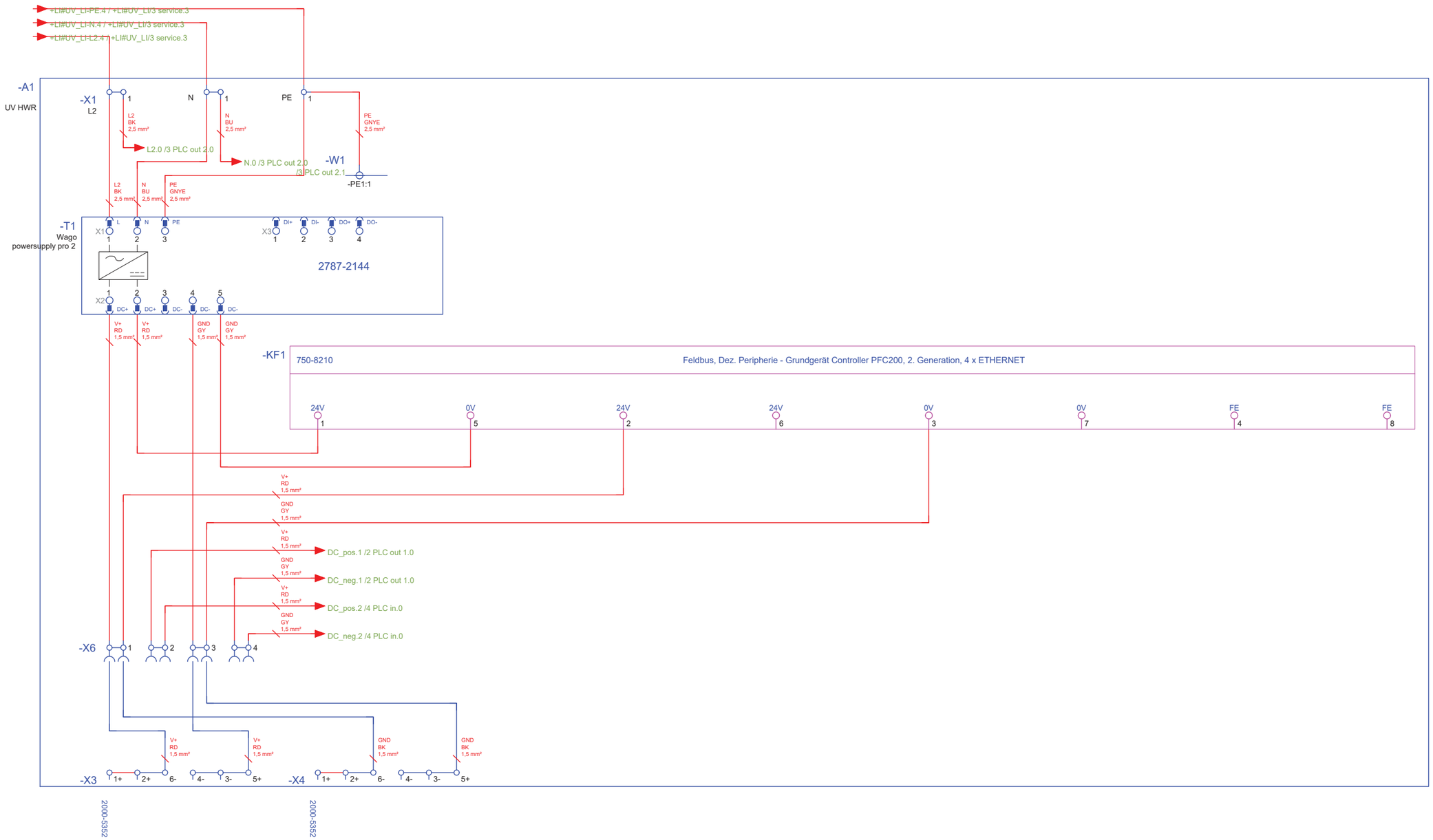

levelup

solar decathlon europe 21»22
WUPPERTAL GERMANY

General	GE
Architecture	AR
Interiors	IN
Structural	ST
Plumbing	PL
Solar Water Heating	SW
Mechanical	ME
Electrical	EL
Photovoltaic System	PV
Teleco. & Build. Aut. System	**BAS**
Instrumentation Drawings	ID
Site Operations	SO
Fire Protection	FP
Health & Safety	HS
Public Tour	PT

Scale
n.t.s. (A3 420x297)

Phase
D#6

Drawing Content-HDU
Wiring Plan

BMS-1008

utility room
++EG+HWR#UV_HWR/PLC_OUT 1

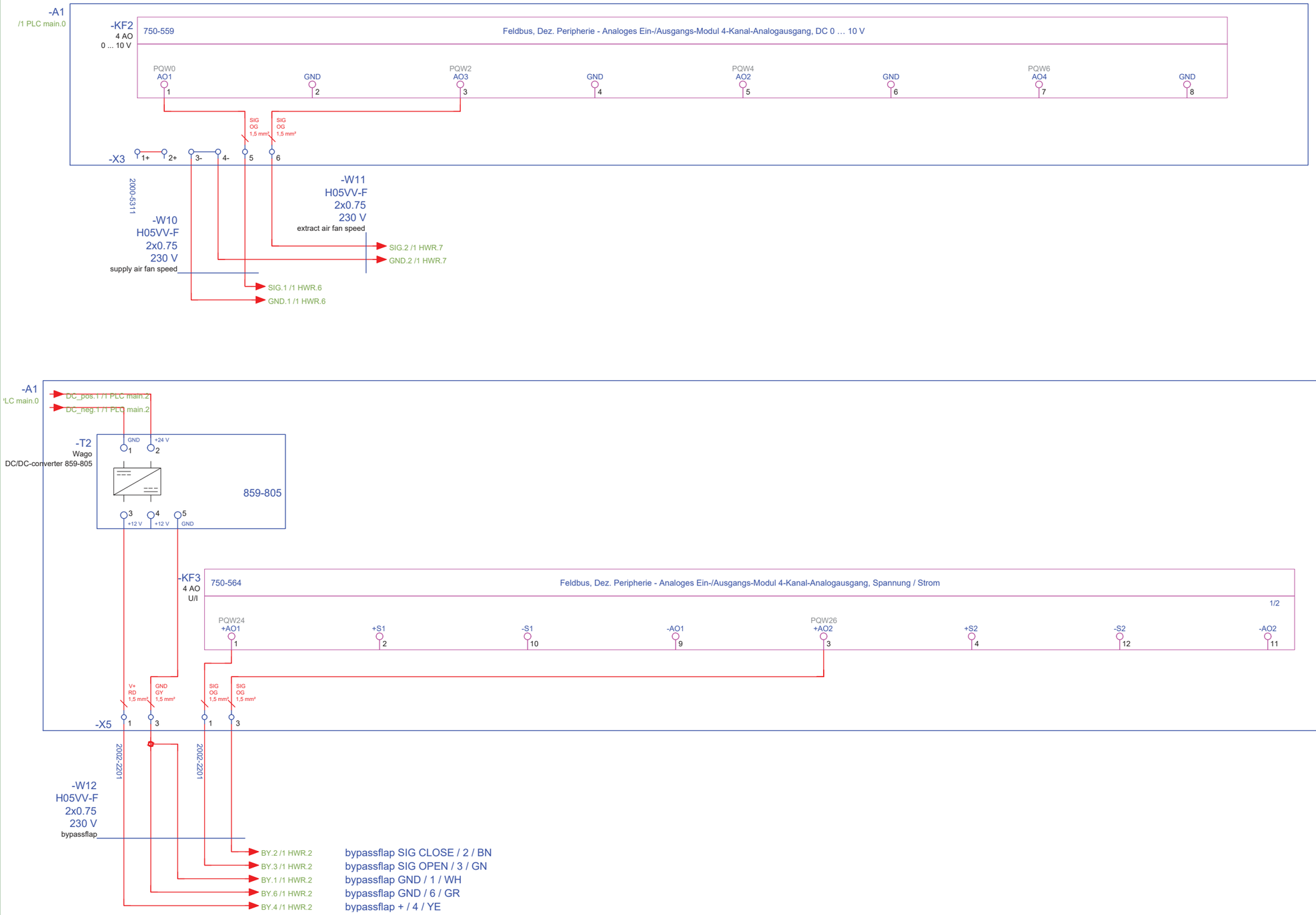

levelup

solar decathlon europe 21»22
WUPPERTAL GERMANY

Scale
n.t.s. (A3 420x297)

Phase
D#6

Drawing Content-HDU
Wiring Plan

BMS-1009

utility room
++EG+HWR#UV_HWR/PLC_OUT 2

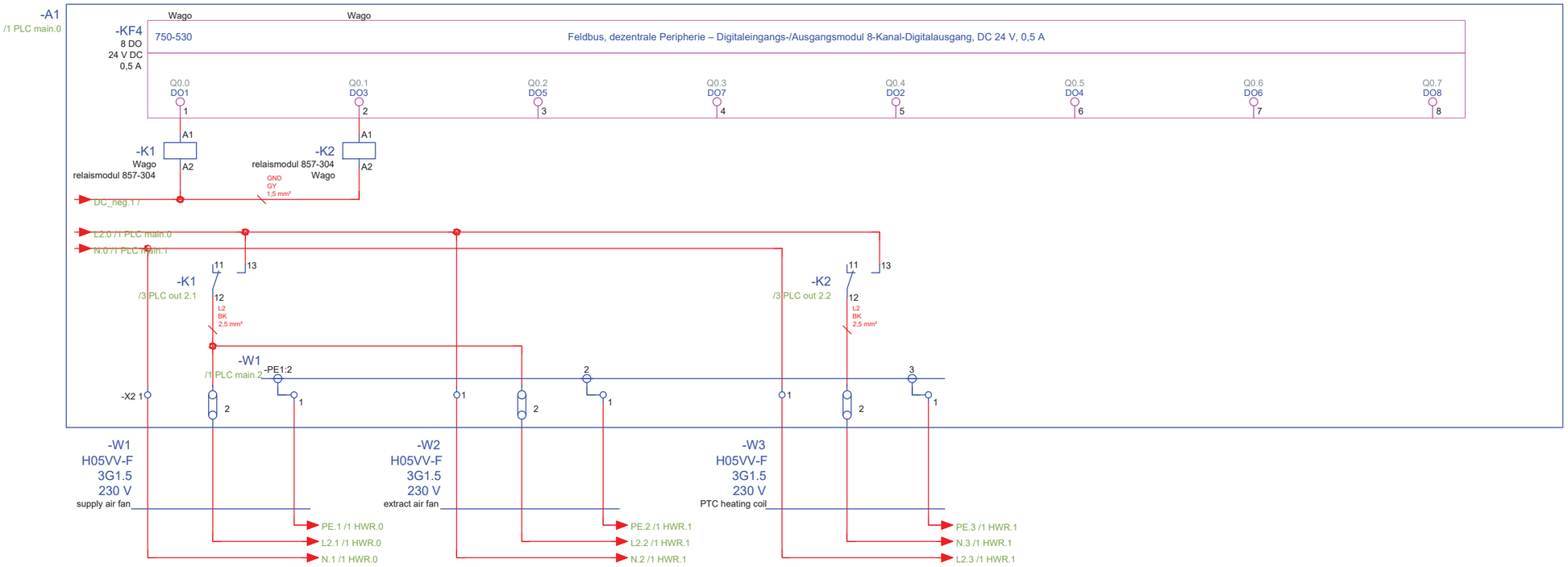

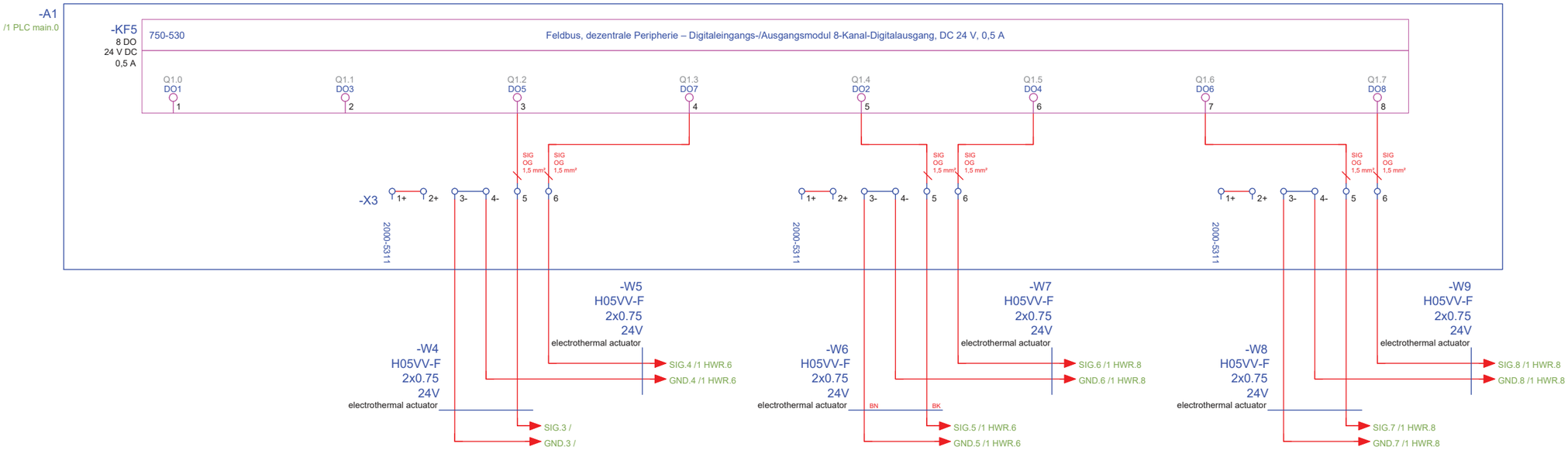

levelup

solar decathlon europe 21»22
WUPPERTAL GERMANY

Scale
n.t.s. (A3 420x297)

Phase
D#6

Drawing Content-HDU
Wiring Plan

BMS-1010

utility room
++EG+HWR#UV_HWR/PLC_IN

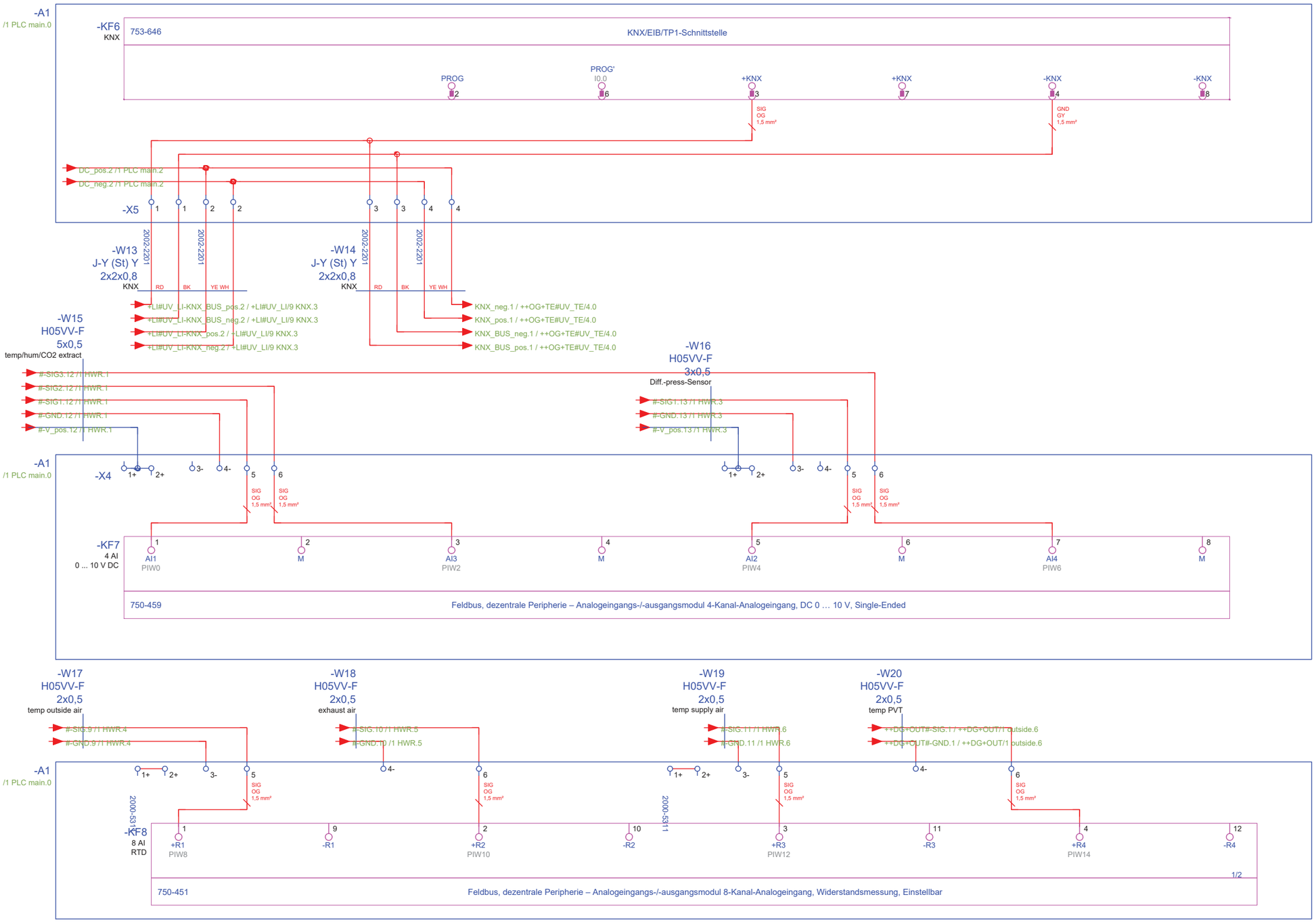

levelup

solar decathlon europe 21»22
WUPPERTAL GERMANY

General	GE
Architecture	AR
Interiors	IN
Structural	ST
Plumbing	PL
Solar Water Heating	SW
Mechanical	ME
Electrical	EL
Photovoltaic System	PV
Teleco. & Build. Aut. System	**BAS**
Instrumentation Drawings	ID
Site Operations	SO
Fire Protection	FP
Health & Safety	HS
Public Tour	PT

Scale
n.t.s. (A3 420x297)

Phase
D#6

Drawing Content-HDU
Wiring Plan

BMS-1011

bathroom
++EG+BA

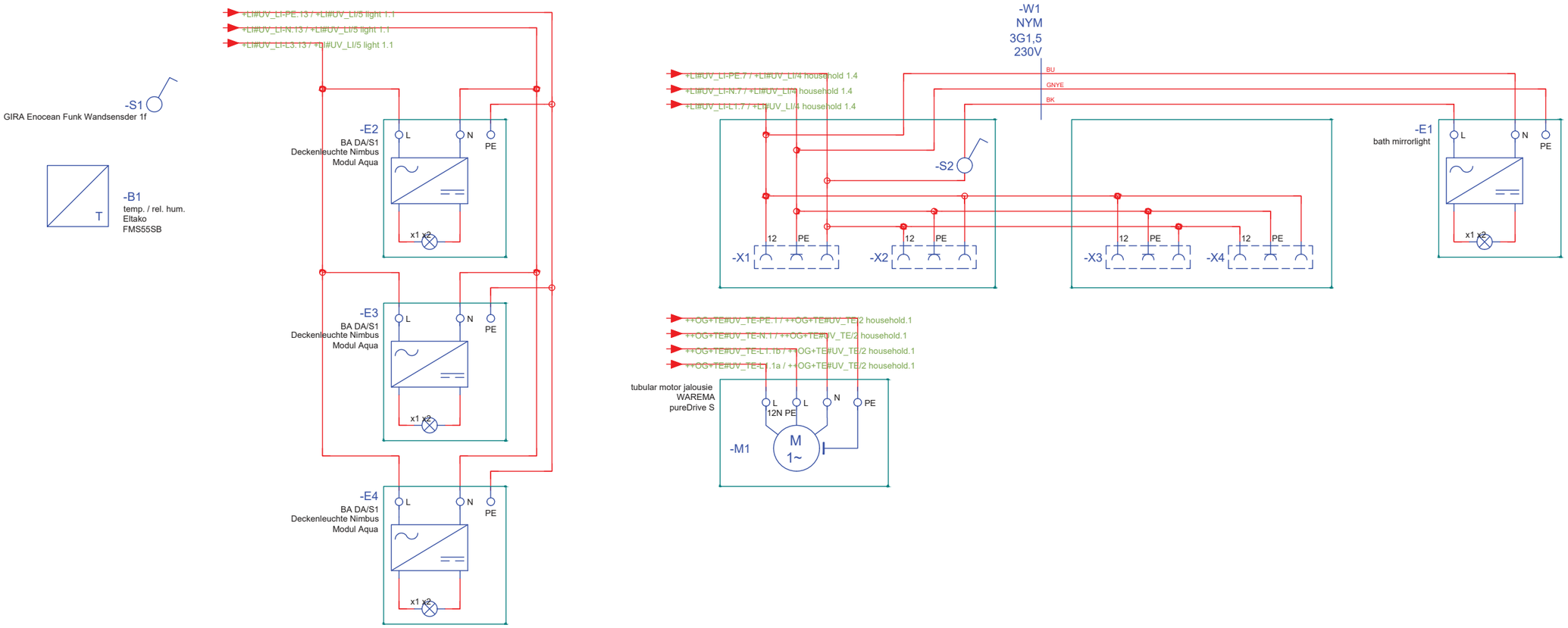

levelup

solar decathlon europe 21»22
WUPPERTAL GERMANY

Scale
n.t.s. (A3 420x297)

Phase
D#6

Drawing Content-HDU
Wiring Plan

BMS-1012

outside
++EG+OUT

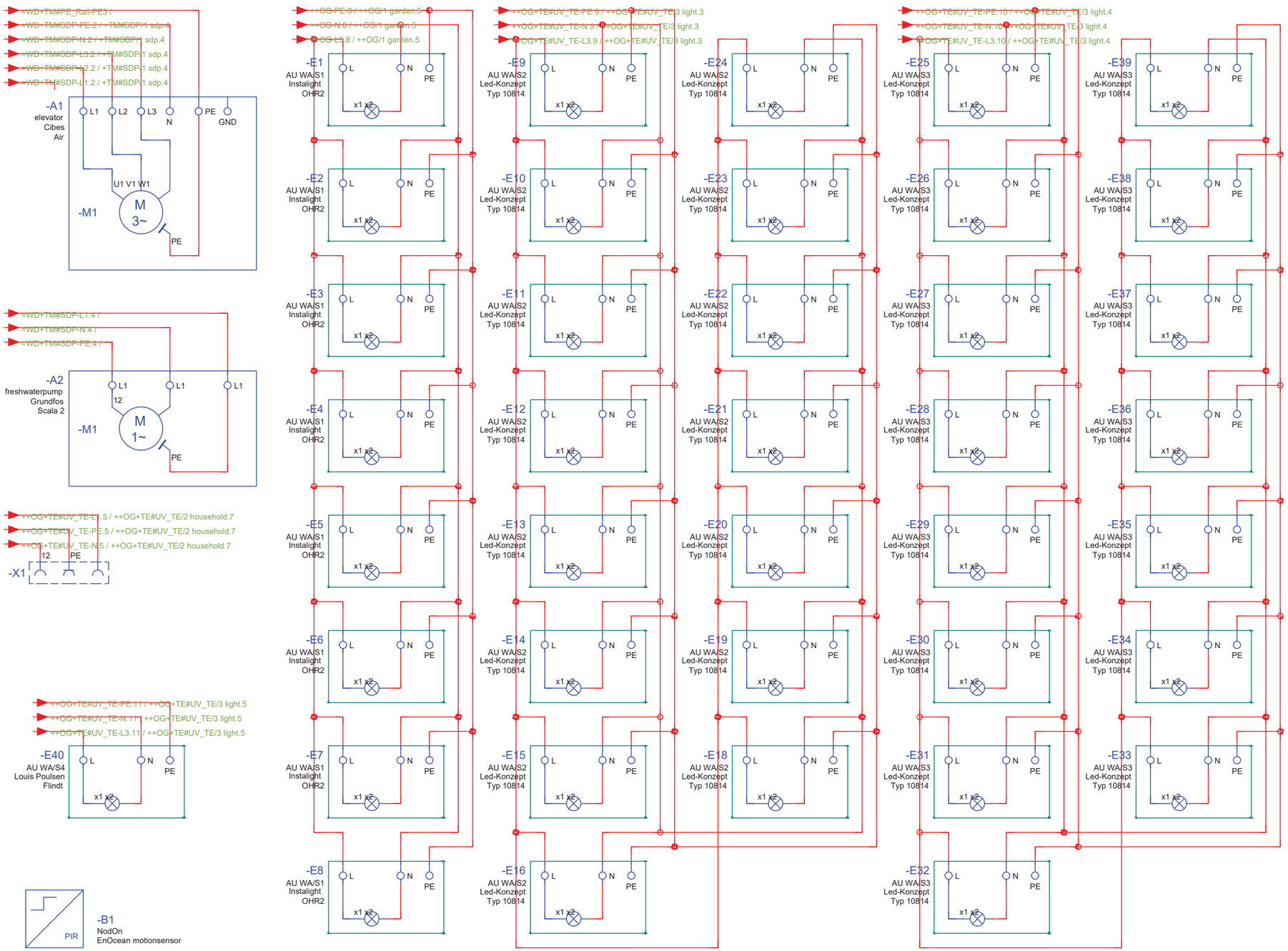

levelup

solar decathlon europe 21»22
WUPPERTAL GERMANY

Scale
n.t.s. (A3 420x297)

Phase
D#6

Drawing Content-HDU
Wiring Plan

BMS-1013

livingroom
++EG+LI

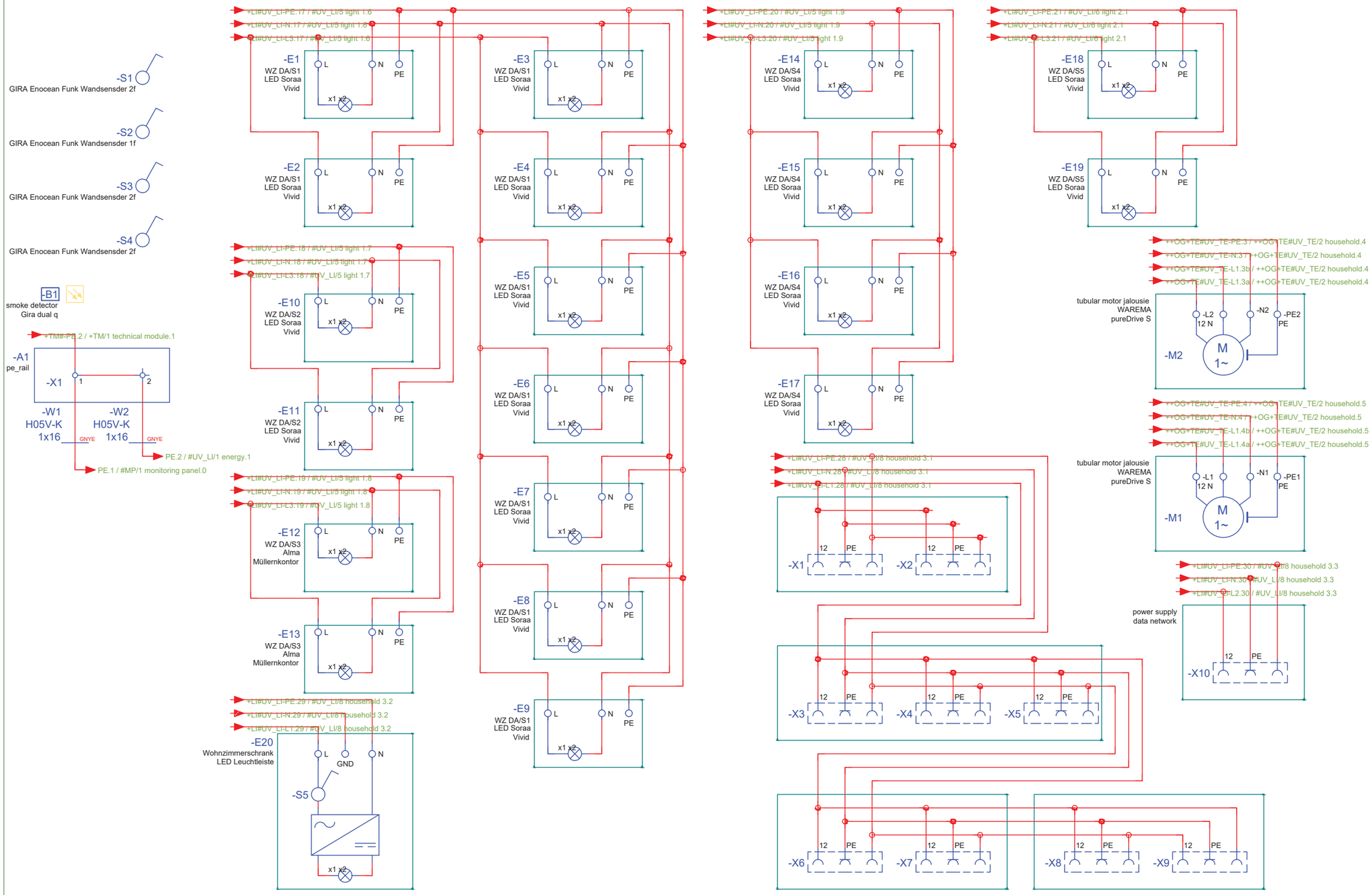

levelup

solar decathlon europe 21»22
WUPPERTAL GERMANY

General	GE
Architecture	AR
Interiors	IN
Structural	ST
Plumbing	PL
Solar Water Heating	SW
Mechanical	ME
Electrical	EL
Photovoltaic System	PV
Teleco. & Build. Aut. System	**BAS**
Instrumentation Drawings	ID
Site Operations	SO
Fire Protection	FP
Health & Safety	HS
Public Tour	PT

Scale
n.t.s. (A3 420x297)

Phase
D#6

Drawing Content-HDU
Wiring Plan

BMS-1014

livingroom - distribiution
++EG+LI#UV_LI/energy

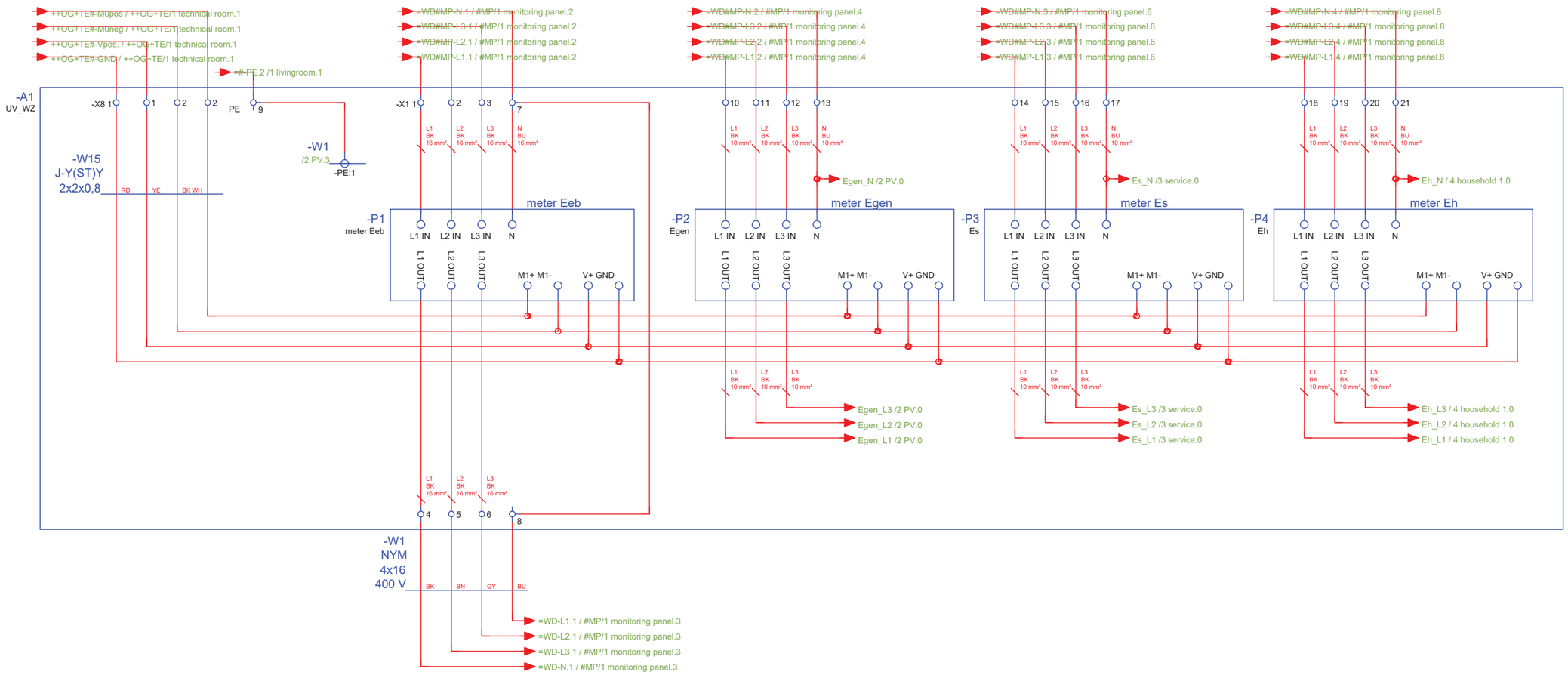

levelup

solar decathlon europe 21»22
WUPPERTAL GERMANY

Scale
n.t.s. (A3 420x297)

Phase
D#6

Drawing Content-HDU
Wiring Plan

BMS-1015

livingroom - distribiution
++EG+LI#UV_LI/KNX

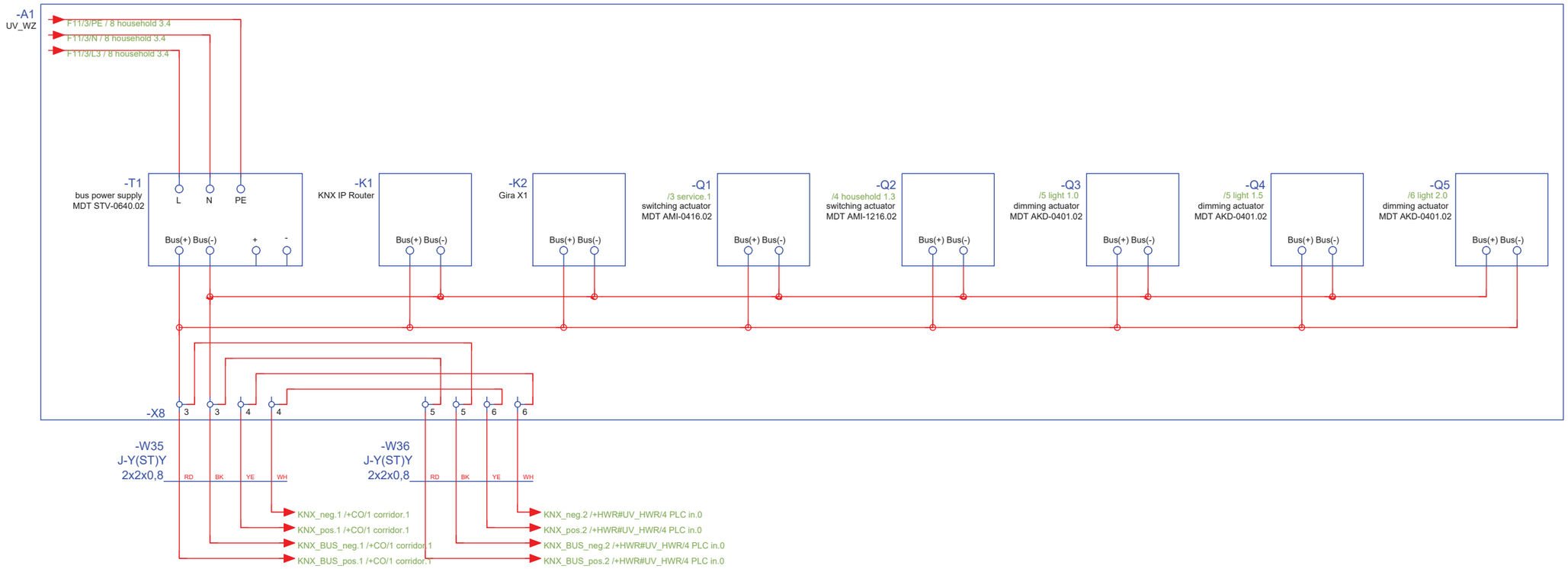

levelup

solar decathlon europe 21»22
WUPPERTAL GERMANY

Scale
n.t.s. (A3 420x297)

Phase
D#6

Drawing Content-HDU
Wiring Plan

BMS-1016

bedroom
++EG+BE

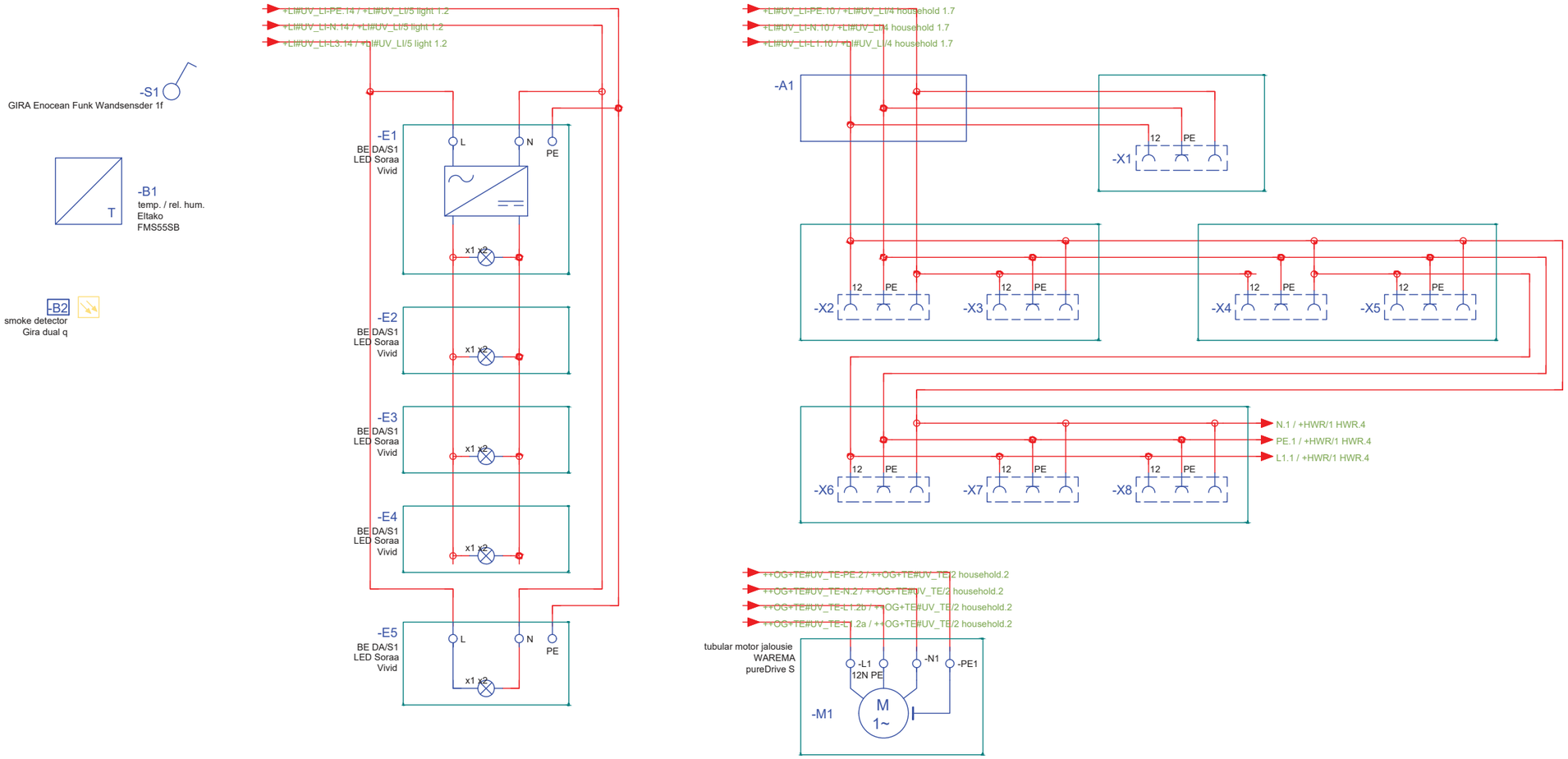

levelup

solar decathlon europe 21»22
WUPPERTAL GERMANY

General	GE
Architecture	AR
Interiors	IN
Structural	ST
Plumbing	PL
Solar Water Heating	SW
Mechanical	ME
Electrical	EL
Photovoltaic System	PV
Teleco. & Build. Aut. System	**BAS**
Instrumentation Drawings	ID
Site Operations	SO
Fire Protection	FP
Health & Safety	HS
Public Tour	PT

Scale
n.t.s. (A3 420x297)

Phase
D#6

Drawing Content-HDU
Wiring Plan

BMS-1017

kitchen
++EG+KI

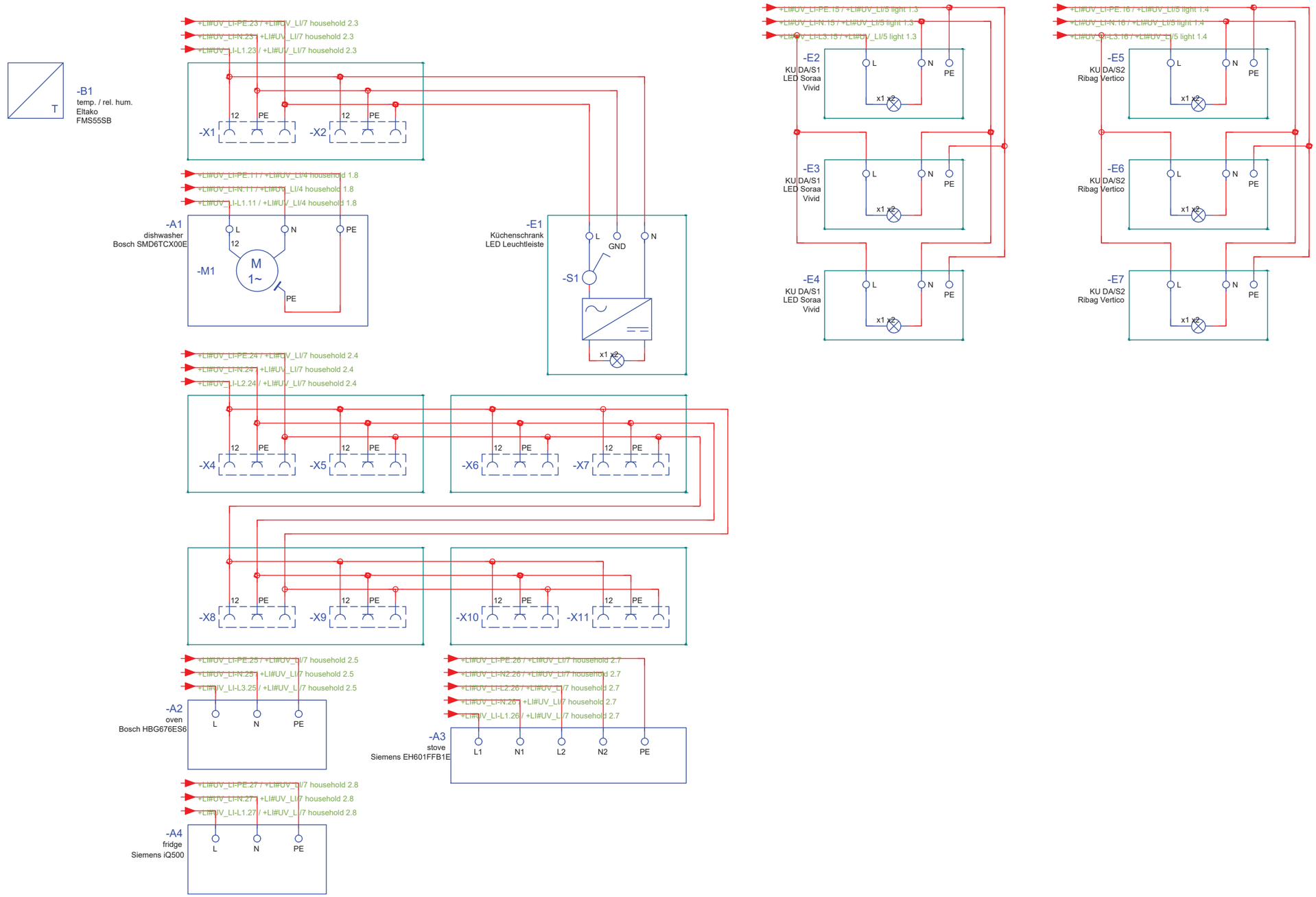

levelup

solar decathlon europe 21»22
WUPPERTAL GERMANY

Scale
n.t.s. (A3 420x297)

Phase
D#6

Drawing Content-HDU
Wiring Plan

BMS-1018

corridor
++EG+CO

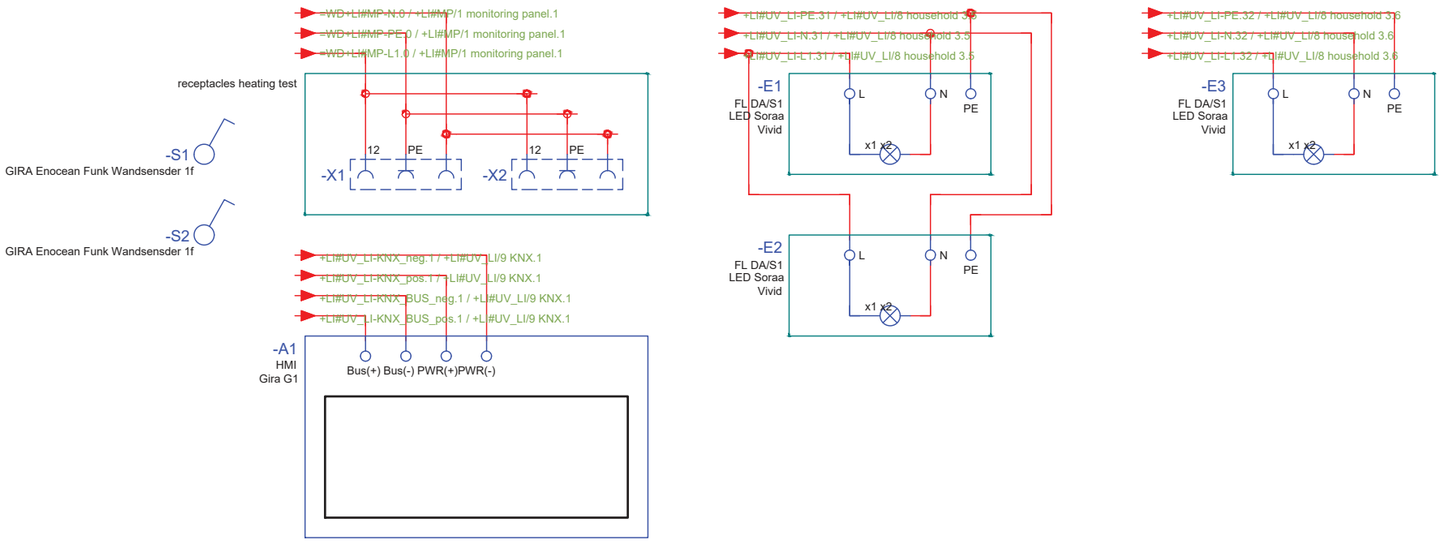

levelup

solar decathlon europe 21»22
WUPPERTAL GERMANY

General	GE
Architecture	AR
Interiors	IN
Structural	ST
Plumbing	PL
Solar Water Heating	SW
Mechanical	ME
Electrical	EL
Photovoltaic System	PV
Teleco. & Build. Aut. System	**BAS**
Instrumentation Drawings	ID
Site Operations	SO
Fire Protection	FP
Health & Safety	HS
Public Tour	PT

Scale
n.t.s. (A3 420x297)

Phase
D#6

Drawing Content-HDU
Wiring Plan

BMS-1019

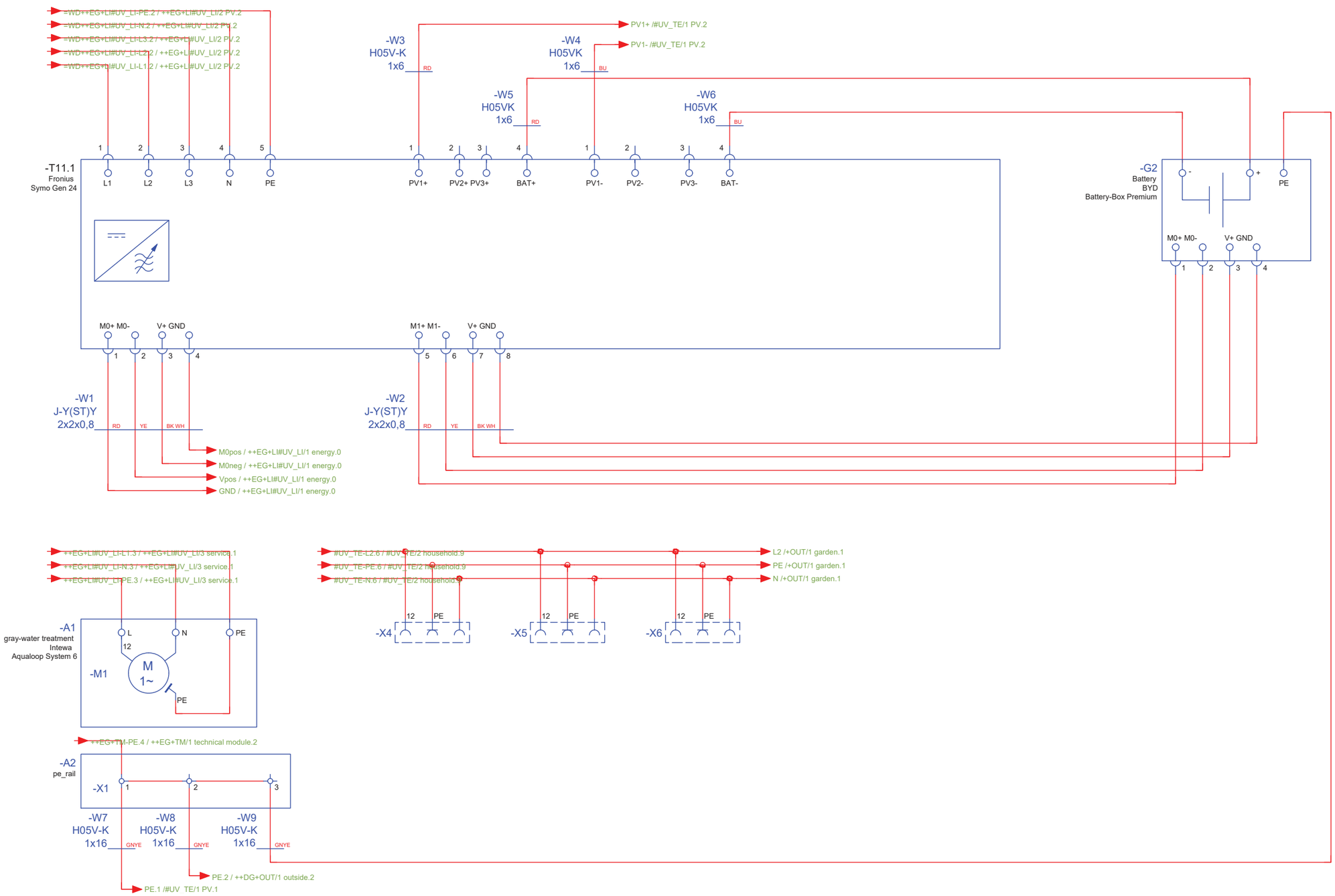

levelup

solar decathlon europe 21»22
WUPPERTAL GERMANY

Scale
n.t.s. (A3 420x297)

Phase
D#6

Drawing Content-HDU
Wiring Plan

BMS-1020

technical room
++OG+TE#UV_TE

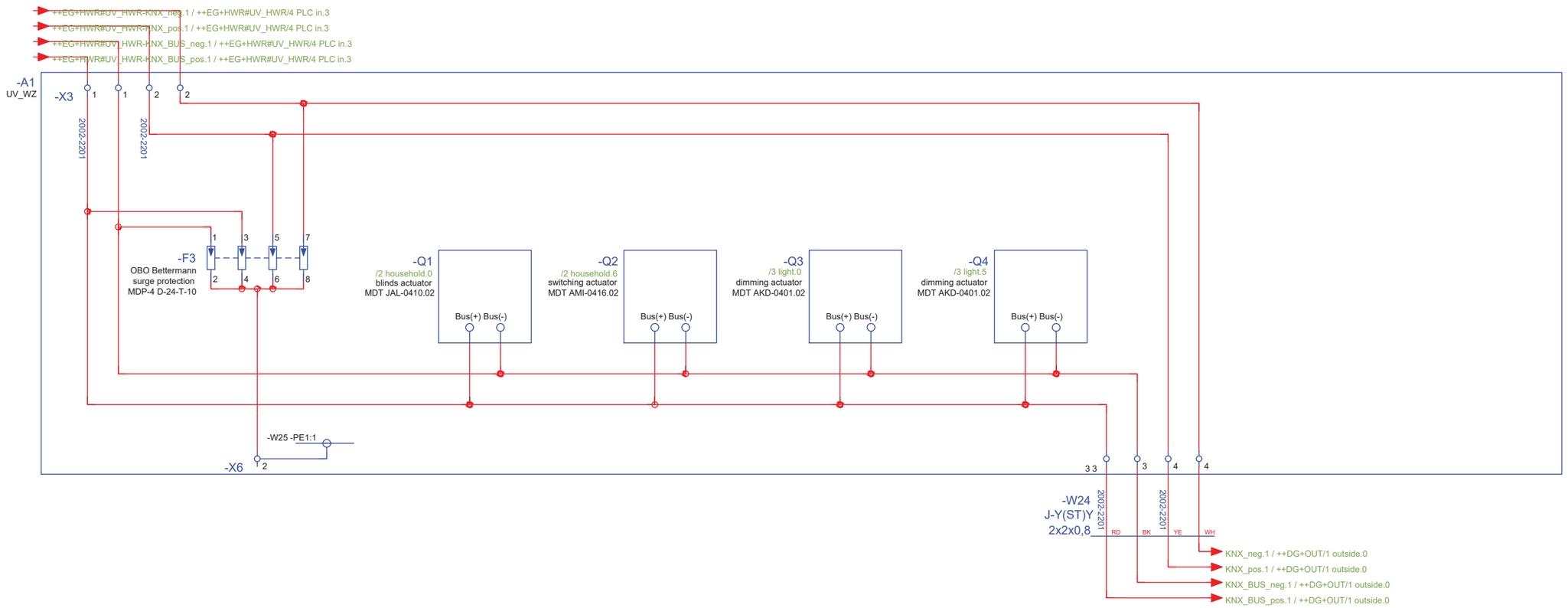

levelup

solar decathlon europe 21»22
WUPPERTAL GERMANY

Scale
n.t.s. (A3 420x297)

Phase
D#6

Drawing Content-HDU
Wiring Plan

BMS-1021

garden
++OG+OUT

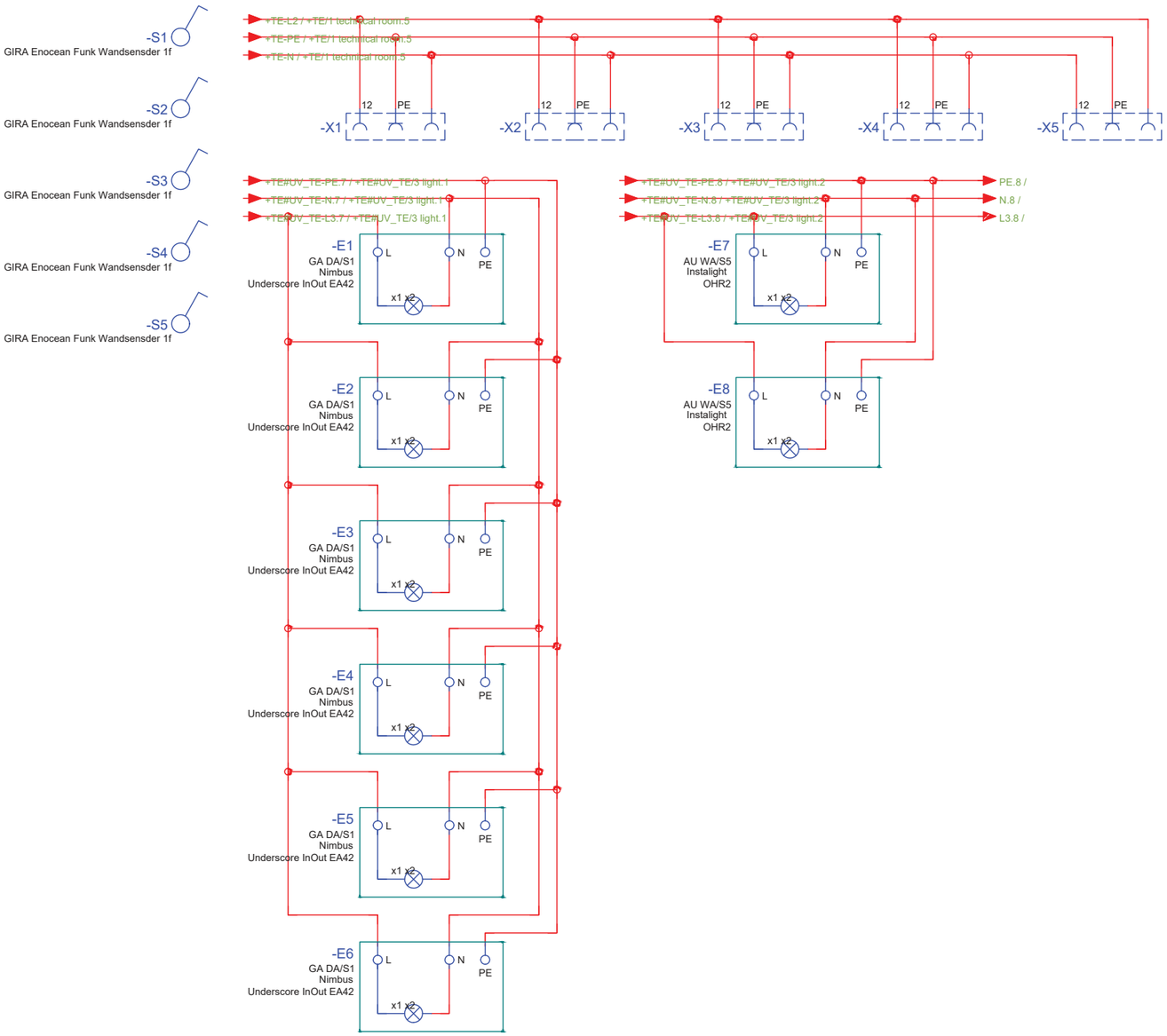

levelup

solar decathlon europe 21»22
WUPPERTAL GERMANY

General	GE
Architecture	AR
Interiors	IN
Structural	ST
Plumbing	PL
Solar Water Heating	SW
Mechanical	ME
Electrical	EL
Photovoltaic System	PV
Teleco. & Build. Aut. System	**BAS**
Instrumentation Drawings	ID
Site Operations	SO
Fire Protection	FP
Health & Safety	HS
Public Tour	PT

Scale
n.t.s. (A3 420x297)

Phase
D#6

Drawing Content-HDU
Wiring Plan

BMS-1022

roof
++DG+OUT

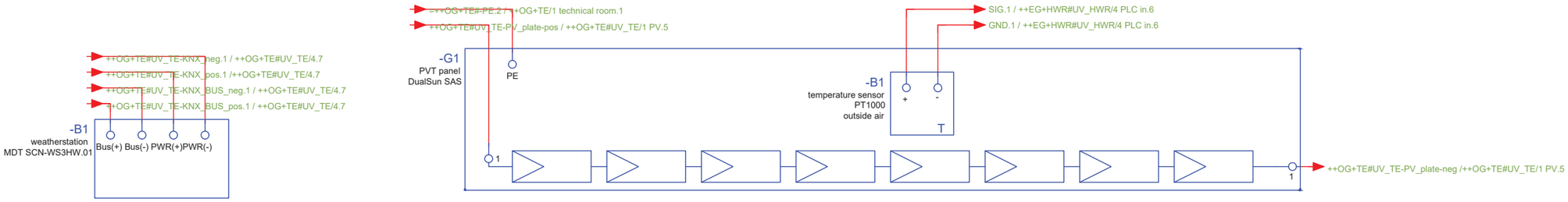

levelup

solar decathlon europe 21»22
WUPPERTAL GERMANY

Scale
n.t.s. (A3 420x297)

Phase
D#6

Drawing Content-HDU
Wiring Plan

BMS-1023

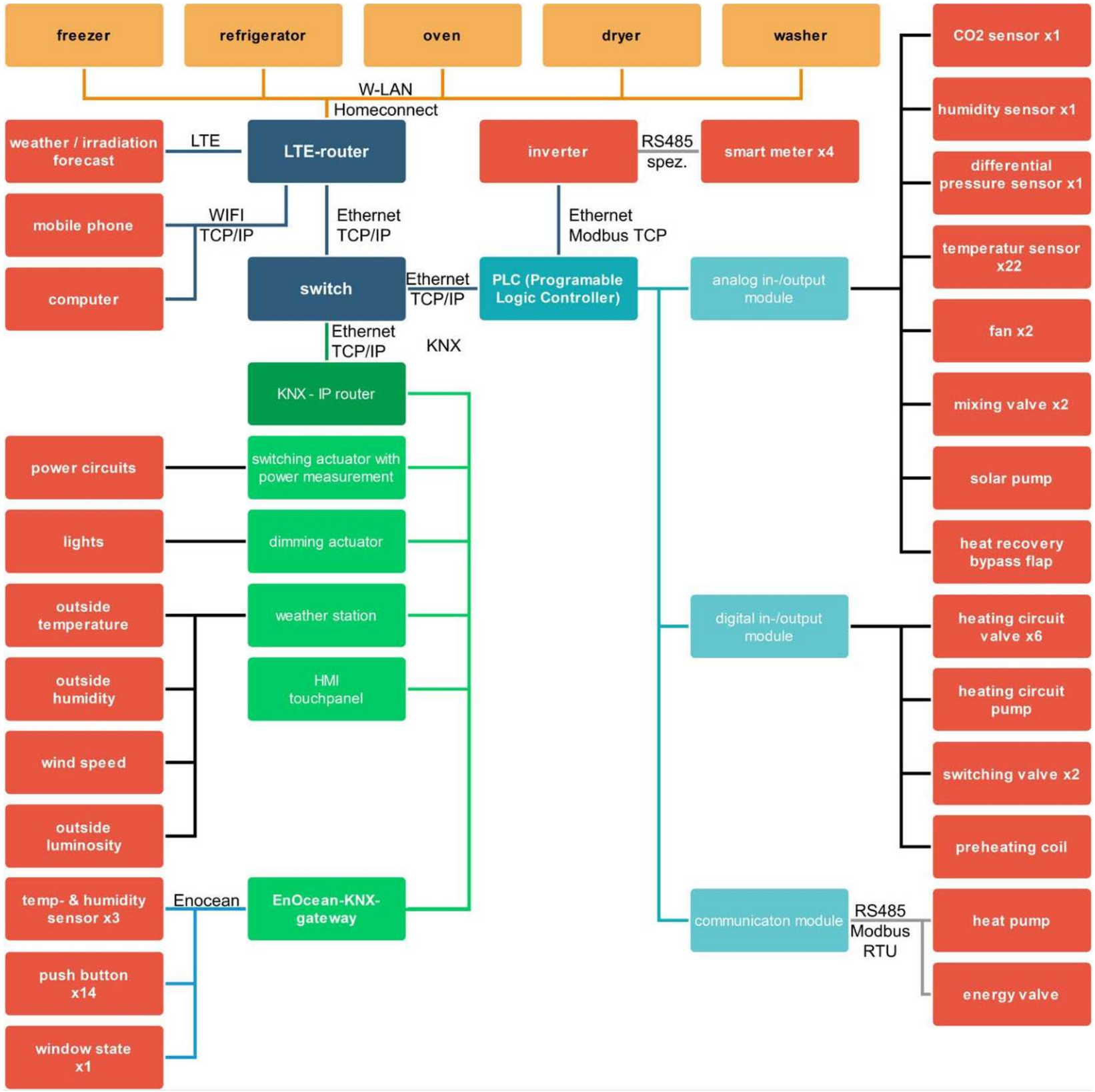

levelup

solar decathlon 21»22 europe
WUPPERTAL GERMANY

General	GE
Architecture	AR
Interiors	IN
Structural	ST
Plumbing	PL
Solar Water Heating	SW
Mechanical	ME
Electrical	EL
Photovoltaic System	PV
Teleco. & Build. Aut. System	**BAS**
Instrumentation Drawings	ID
Site Operations	SO
Fire Protection	FP
Health & Safety	HS
Public Tour	PT

Scale
n.t.s. (A3 420x297)

Phase
D#6

Drawing Content-HDU
Schematic diagram

BMS-2001

EG	TM		A7	switching valve	Belimo	SR24A	
			A8	switching valve	Belimo	SR24A	
			A9	switching valve	Belimo	SR24A	
			A10	switching valve	Belimo	SR24A	
			A11	switching valve	Belimo	SR24A	
			A12	switching valve	Belimo	SR24A	
			A13	switching valve	Belimo	SR24A	
			A14	switching valve	Belimo	SR24A	
			A15	switching valve	Belimo	SR24A	
			B1	temperature sensor		PT1000	temp DHW-station supply
			B2	temperature sensor		PT1000	temp DHW-station return
			B3	temperature sensor		PT1000	temp HP DHW-Storage supply
			B4	temperature sensor		PT1000	temp HP DHW-Storage return
			B5	temperature sensor		PT1000	temp DHW cold supply
			B6	temperature sensor		PT1000	temp DHW hot supply
			B7	temperature sensor		PT1000	temp HP buffer-storage supply
			B8	temperature sensor		PT1000	temp HP buffer-storage return
			B9	temperature sensor		PT1000	temp HP primary supply
			B10	temperature sensor		PT1000	temp HP primary return
			B11	temperature sensor		PT1000	temp heating supply
			B12	temperature sensor		PT1000	temp heating return
			B13	temperature sensor		PT1000	temp buffer-storage heating outlet
			B14	temperature sensor		PT1000	temp buffer-storage top
			B15	temperature sensor		PT1000	temp buffer-storage middle
			B16	temperature sensor		PT1000	temp buffer-storage bottom
			B17	temperature sensor		PT1000	temp DHW-storage top
			B18	temperature sensor		PT1000	temp DHW-storage middle
			B19	temperature sensor		PT1000	temp DHW-storage bottom
			B20	temperature sensor		PT1000	temp solar supply
			B21	temperature sensor		PT1000	temp solar return

EG	TM	UV_TM	KF1	PLC	WAGO	750-8210	
			KF2	8-channel digital output	WAGO	750-530	
			KF3	2 pulse width outputs	WAGO	750-511	
			KF4	8-channel analog input	WAGO	750-451	
			KF5	8-channel analog input	WAGO	750-451	
			KF6	8-channel analog input	WAGO	750-451	
			KF7	8-channel analog input	WAGO	750-451	
			KF8	8-channel analog input	WAGO	750-451	
			KF9	8-channel analog input	WAGO	750-451	
			KF10	RS-485 Serial Interface	WAGO	750-653/003-000	
			KF11	RS-485 Serial Interface	WAGO	750-653/003-000	

EG	HWR		B1	temp/hum/CO2 sensor	Belimo	22DTM-11	
			B2	diff.-press sensor	Belimo	22ADP-124D	
			A1	ventilationsystem	Maico	WS3000	

EG	HWR	A1	B1	temperature sensor		PT1000	outside air
			B2	temperature sensor		PT1000	exhaust air
			B3	temperature sensor		PT1000	supply air

levelup

solar decathlon 21»22 europe
WUPPERTAL GERMANY

Scale
n.t.s. (A3 420x297)

Phase
D#6

Drawing Content-HDU
Equipment

BMS-3001

EG	HWQ	UV_HWR	KF1	PLC	WAGO	750-8210	
			KF2	4-channel analog output	WAGO	750-559	
			KF3	4-channel analog output	WAGO	750-564	
			KF4	8-channel digital output	WAGO	750-530	
			KF5	8-channel digital output	WAGO	750-530	
			KF6	KNX/EIB/TP1 Interface	WAGO	753-646	
			KF7	4-channel analog input	WAGO	750-459	
			KF8	8-channel analog input	WAGO	750-451	

EG	BA		B1	temp. / rel. hum. sensor	Eltako	FMS55SB	
			S1	pushbutton	GIRA	Enocean pushbutton 1f	

EG	OUT		B1	motion sensor	NodOn	EnOcean motionsensor	

EG	LI		B1	smoke detector	Gira	dual q	
			S1	pushbutton	GIRA	Enocean pushbutton 2f	
			S2	pushbutton	GIRA	Enocean pushbutton 1f	
			S3	pushbutton	GIRA	Enocean pushbutton 2f	
			S4	pushbutton	GIRA	Enocean pushbutton 2f	

EG	LI	UV_LI	P1	smartmeter	Fronius	TS 65A-3	
			P2	smartmeter	Fronius	TS 65A-3	
			P3	smartmeter	Fronius	TS 65A-3	
			P4	smartmeter	Fronius	TS 65A-3	
			K1	KNX-TCP/IP-Gateway	Gira	KNX IP Router	
			K2		Gira	X1	
			Q1	switching actuator	MDT	AMI-0416.02	
			Q2	switching actuator	MDT	AMI-1216.02	
			Q3	dimming actuator	MDT	AKD-0401.02	
			Q4	dimming actuator	MDT	AKD-0401.02	
			Q5	dimming actuator	MDT	AKD-0401.02	

EG	BE		B1	temp. / rel. hum. sensor	Eltako	FMS55SB	
			B2	smoke detector	Gira	dual q	
			S1	pushbutton	GIRA	Enocean pushbutton 1f	

EG	KI		B1	temp. / rel. hum. sensor	Eltako	FMS55SB	

EG	CO		A1	HMI	GIRA	G1	
			S1	pushbutton	GIRA	Enocean pushbutton 1f	
			S2	pushbutton	GIRA	Enocean pushbutton 1f	

OG	TE		G1	battery	BYD	Battery-Box Premium	
			T1	inverter	Fronius	Symo Gen 24	

OG	TE	UV_TE	Q1	blinds actuator	MDT	JAL-0410.02	
			Q2	switching actuator	MDT	AMI-0416.02	
			Q3	dimming actuator	MDT	AKD-0401.02	
			Q4	dimming actuator	MDT	AKD-0401.02	

levelup

solar decathlon europe 21-22
WUPPERTAL GERMANY

Scale
n.t.s. (A3 420x297)

Phase
D#6

Drawing Content-HDU
Equipment

BMS-3002

OG	OUT		S1	pushbutton	GIRA	Enocean pushbutton 1f	
			S2	pushbutton	GIRA	Enocean pushbutton 1f	
			S3	pushbutton	GIRA	Enocean pushbutton 1f	
			S4	pushbutton	GIRA	Enocean pushbutton 1f	
			S5	pushbutton	GIRA	Enocean pushbutton 1f	

DG	OUT		B1	weatherstation	MDT	SCN-WS3HW.01	
			G1	PVT panel	DualSun	SAS	

DG	OUT	G1	B1	temperature sensor		PT1000	temperatur PVT-modul

levelup

solar decathlon europe 21»22
WUPPERTAL GERMANY

Scale
n.t.s. (A3 420x297)

Phase
D#6

Drawing Content-HDU
Equipment

BMS-3003

Instrumentation Drawings (ID)

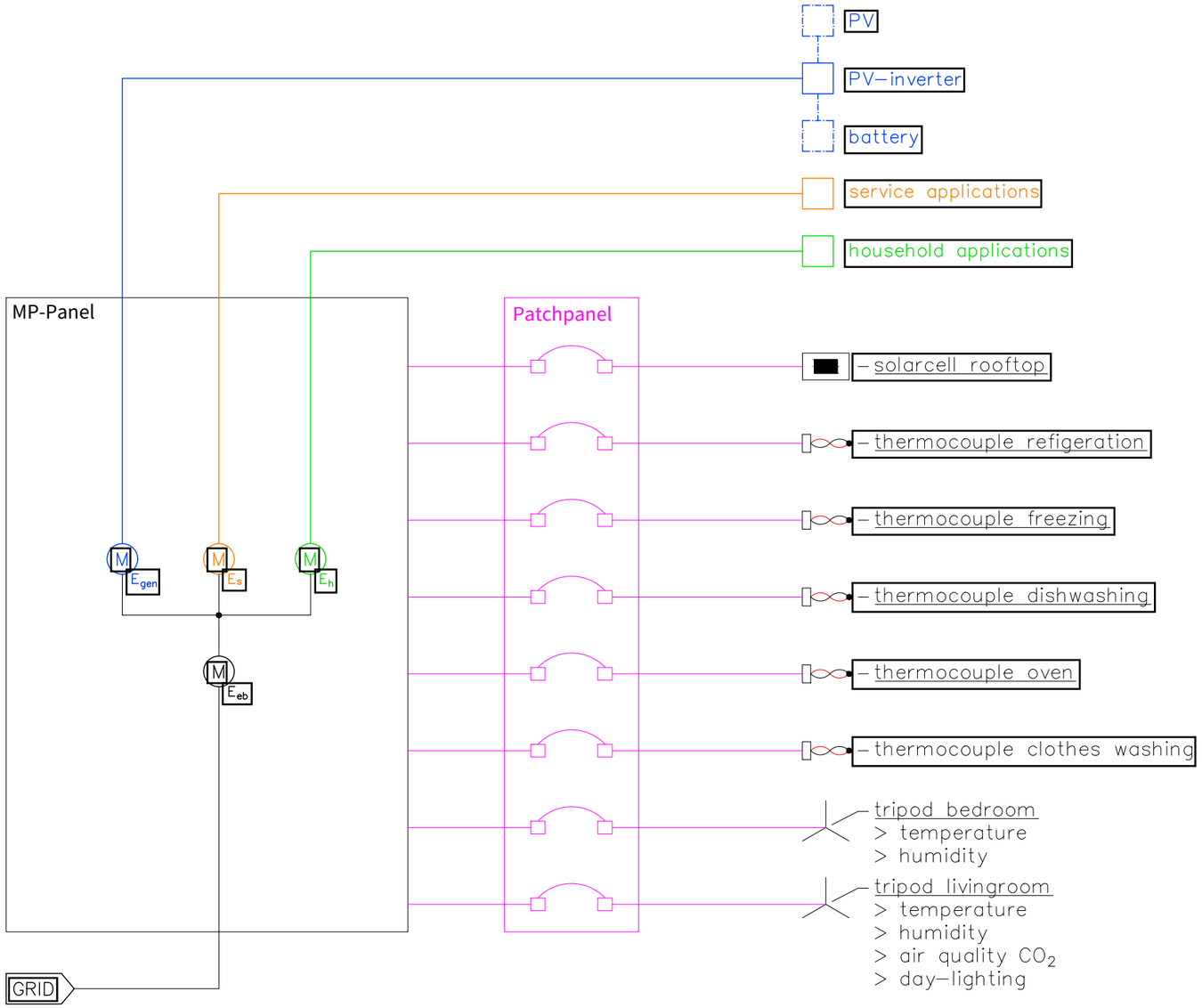

levelup

solar decathlon europe 21-22
WUPPERTAL GERMANY

General	GE
Architecture	AR
Interiors	IN
Structural	ST
Plumbing	PL
Solar Water Heating	SW
Mechanical	ME
Electrical	EL
Photovoltaic System	PV
Teleco. & Build. Aut. System	BAS
Instrumentation Drawings	**ID**
Site Operations	SO
Fire Protection	FP
Health & Safety	HS
Public Tour	PT

General / Grid
PV–AC
PV–DC
Service (HVAC)
Household (light, household appliances,etc.)
CAT 6.A

Scale
1:50 (A3 420x297)

Phase
D#6

Drawing Content-HDU
Conceptual Drawings

ID-0001

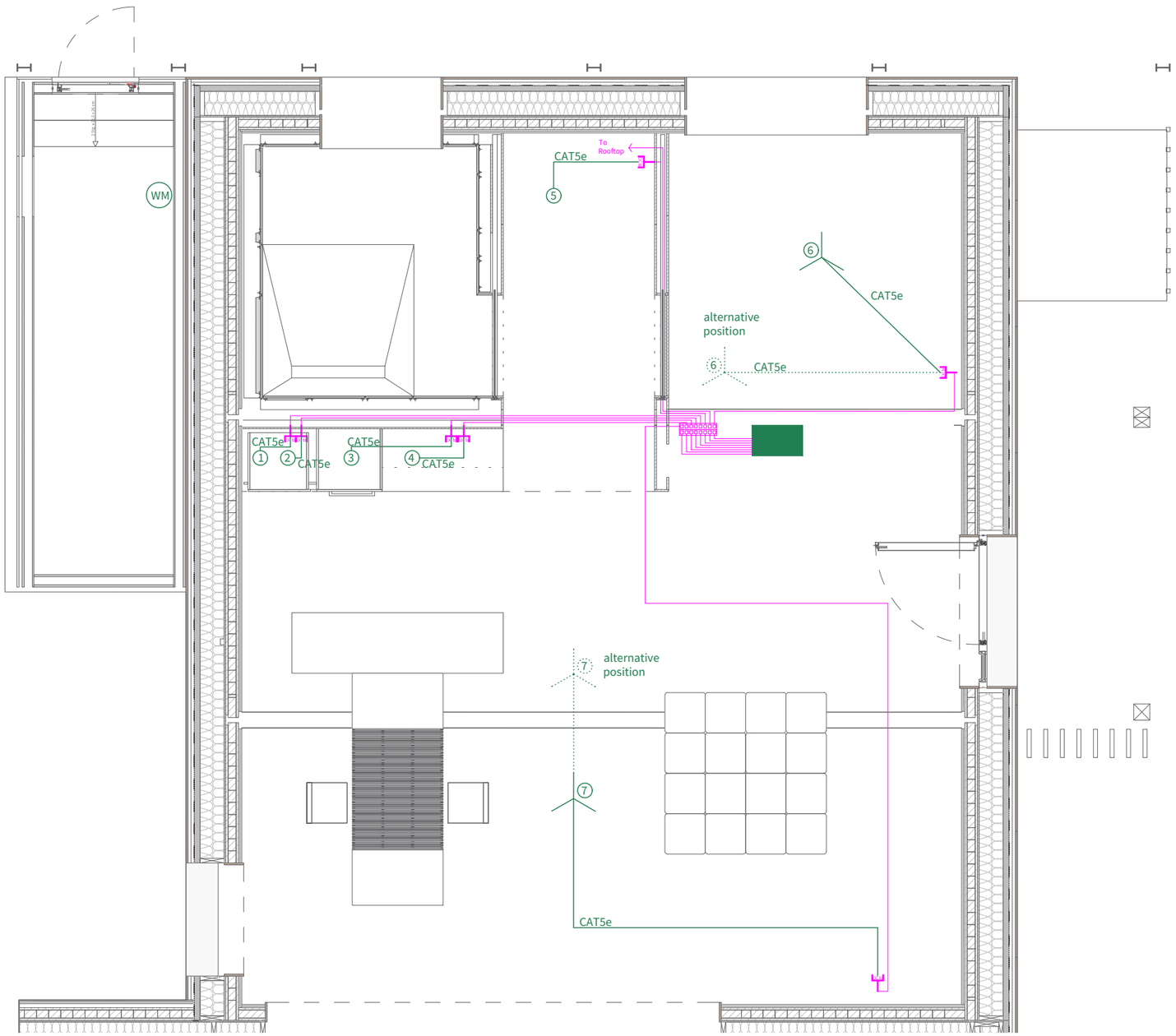

levelup

solar decathlon europe 21-22
WUPPERTAL GERMANY

General	GE
Architecture	AR
Interiors	IN
Structural	ST
Plumbing	PL
Solar Water Heating	SW
Mechanical	ME
Electrical	EL
Photovoltaic System	PV
Teleco. & Build. Aut. System	BAS
Instrumentation Drawings	**ID**
Site Operations	SO
Fire Protection	FP
Health & Safety	HS
Public Tour	PT

1. refrigeration
2. freezer
3. oven
4. dishwashing
5. clothes washing
6. tripod bedroom
7. tripod livingroom
8. rooftop solarcell

RJ45 networksocket
tripod
monitoring panel
CAT 5e
CAT 6a
patchpanel
WM water meter

Scale
1:50 (A3 420x297)

Phase
D#6

Drawing Content-HDU
General Monitoring
Level 01

ID-1001

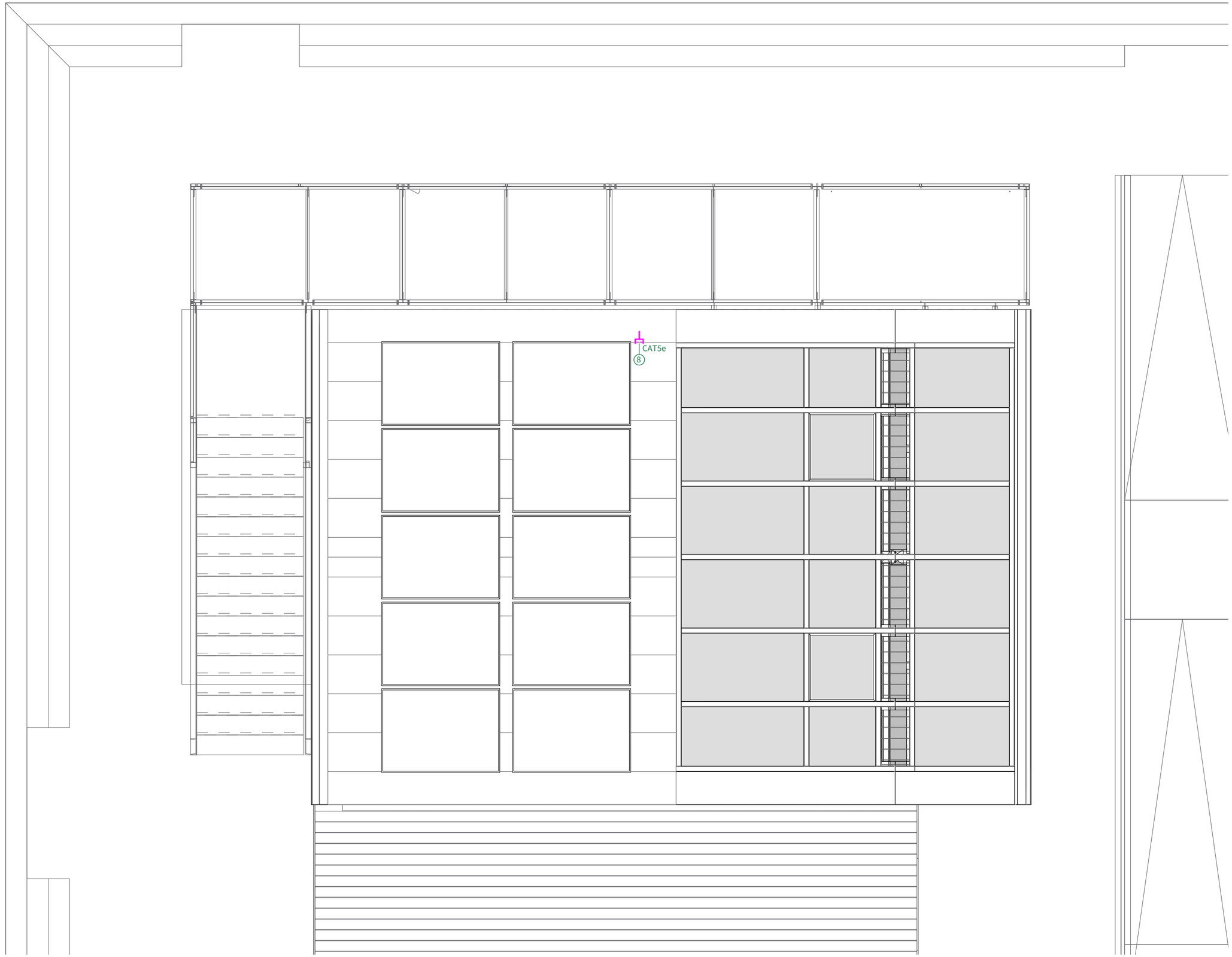

levelup

solar decathlon europe 21-22
WUPPERTAL GERMANY

General	GE
Architecture	AR
Interiors	IN
Structural	ST
Plumbing	PL
Solar Water Heating	SW
Mechanical	ME
Electrical	EL
Photovoltaic System	PV
Teleco. & Build. Aut. System	BAS
Instrumentation Drawings	**ID**
Site Operations	SO
Fire Protection	FP
Health & Safety	HS
Public Tour	PT

1. refrigeration
2. freezer
3. oven
4. dishwashing
5. clothes washing
6. tripod bedroom
7. tripod livingroom
8. rooftop solarcell
- RJ45 networksocket
- tripod
- monitoring panel
- CAT 5e
- CAT 6a
- patchpanel
- WM water meter

Scale
1:50 (A3 420x297)

Phase
D#6

Drawing Content-HDU
General Monitoring
Level 03

ID-1002

sensor (sub-contest)	sensor	type of wire	length of wire from MP to sensor in m
3.4	PV reference cell	CAT 6A	12
7.1 7.2 7.3 7.4	temperature humidity air quality CO_2 day-lighting	CAT 6A	3
7.1 7.2	temperature humidity	CAT 6A	21
8.1	refrigeration	CAT 6A	4
8.2	freezing	CAT 6A	4
8.3	clothes washing	CAT 6A	8
8.5	dishwashing	CAT 6A	8
8.6	oven	CAT 6A	3.5

Scale
1:50 (A3 420x297)

Phase
D#6

Drawing Content-HDU
General Monitoring Cabel Length

ID-1003

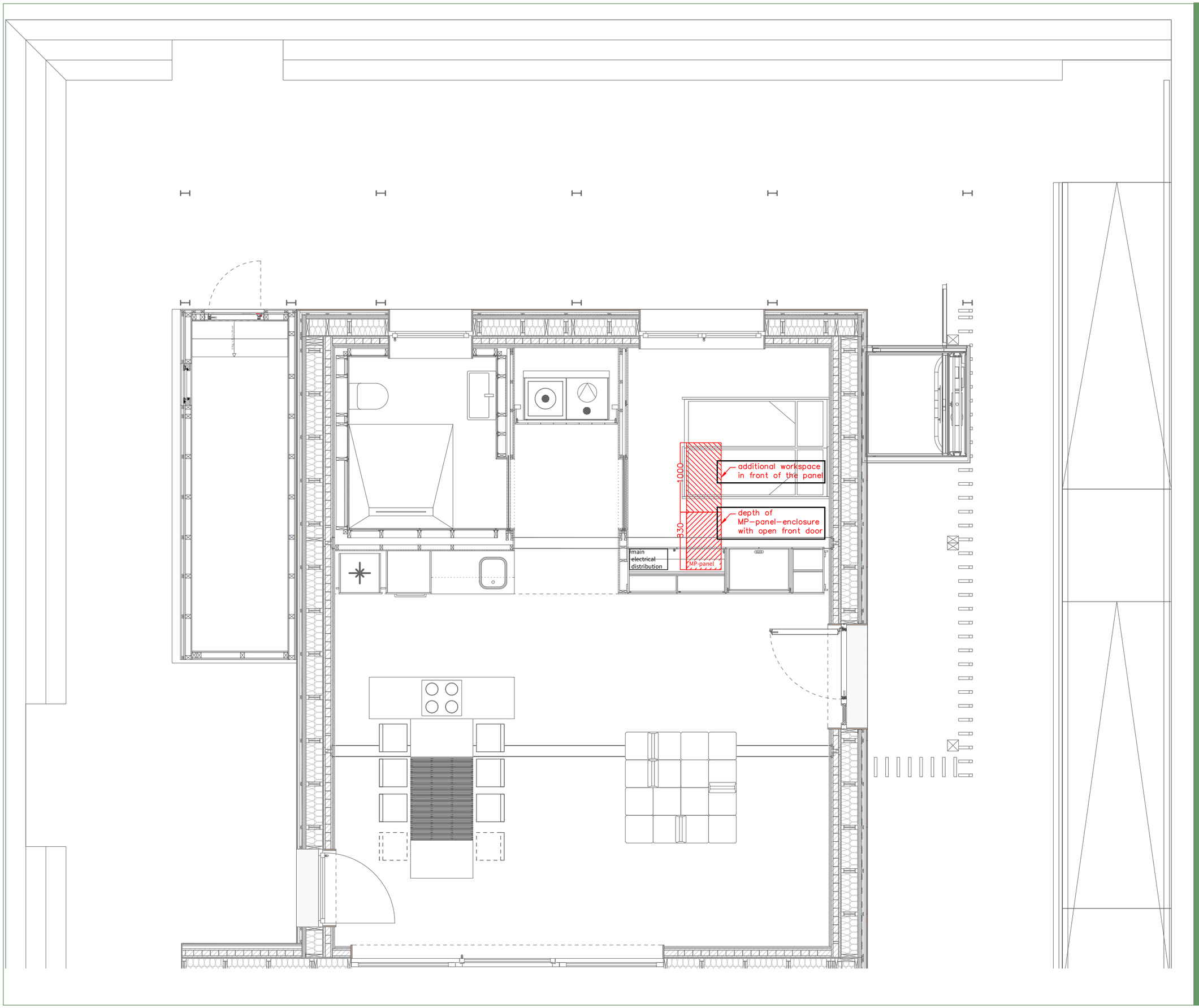

levelup

solar decathlon europe 21-22
WUPPERTAL GERMANY

Scale
1:50 (A3 420x297)

Phase
D#6

Drawing Content-HDU
Monitoring panel room
Level 01

ID-2001

front view
MP-panel &
main electrical distribuition room

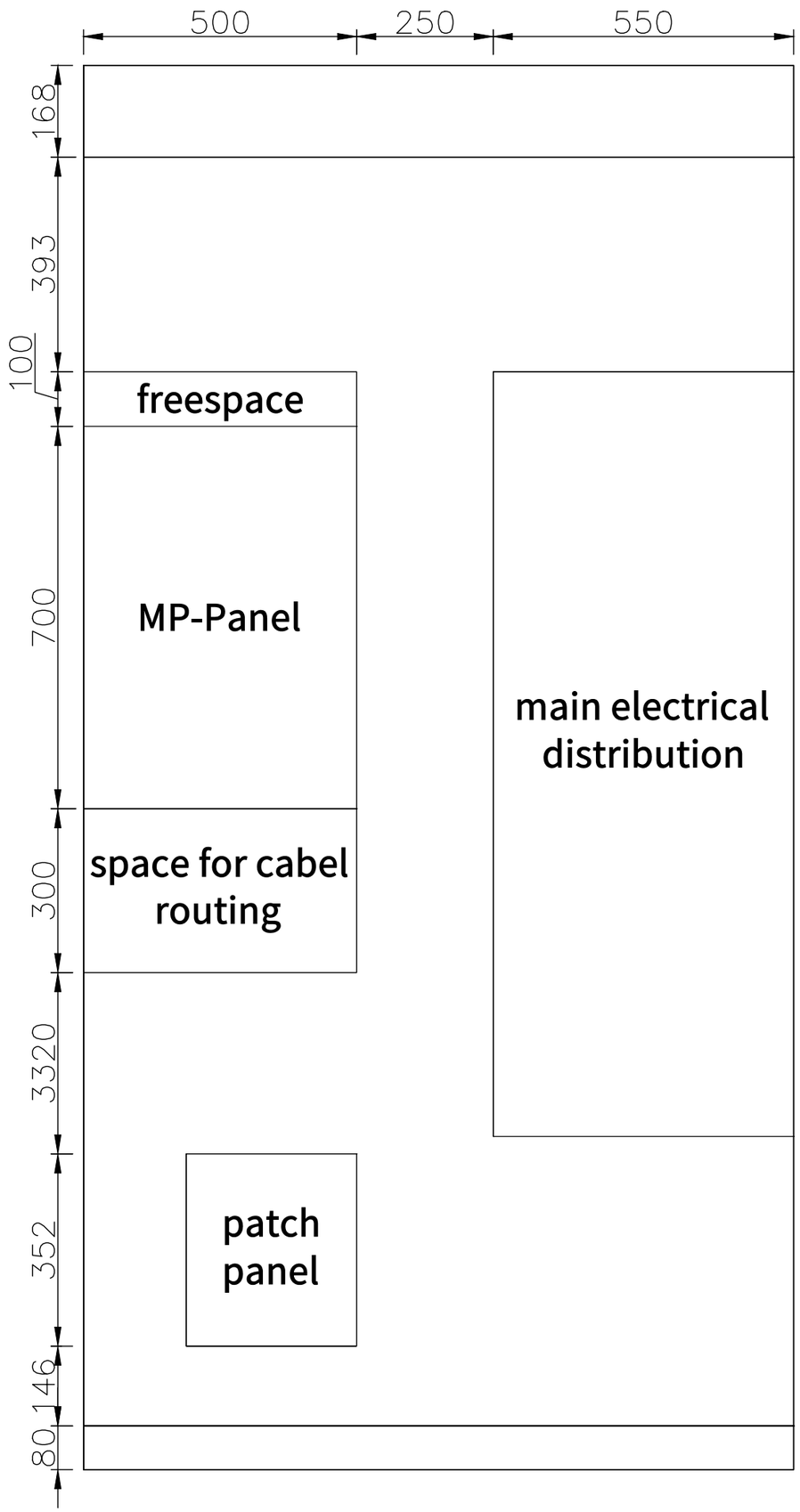

levelup

solar decathlon europe 21-22
WUPPERTAL GERMANY

Scale
1:10 (A3 420x297)

Phase
D#6

Drawing Content-HDU
Monitoring panel room Detail

ID-2002

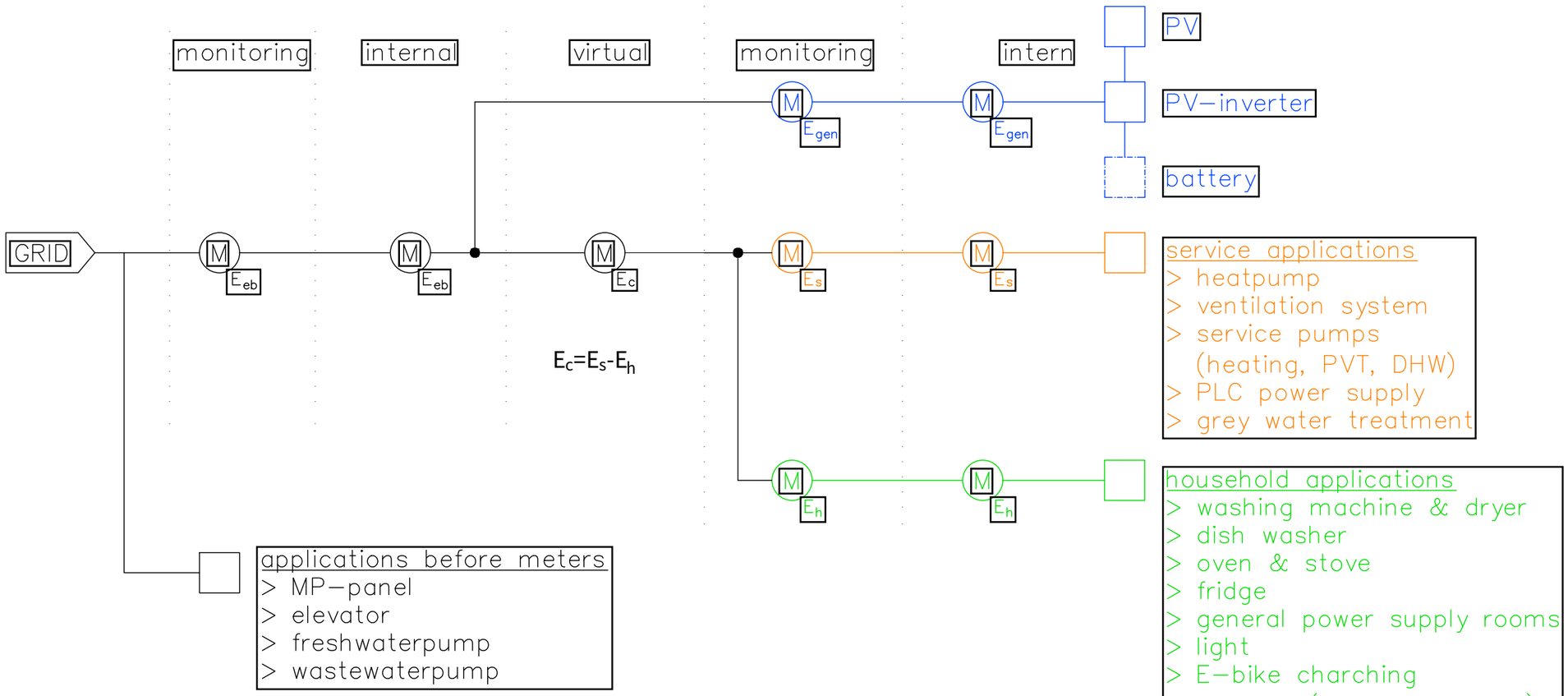

levelup

solar decathlon europe 21-22
WUPPERTAL GERMANY

General / Grid
PV
Service (HVAC)
Household (light, household appliances,etc.)

Scale
n.t.s. (A3 420x297)

Phase
D#6

Drawing Content-HDU
Electricity meters' topology

ID-3001

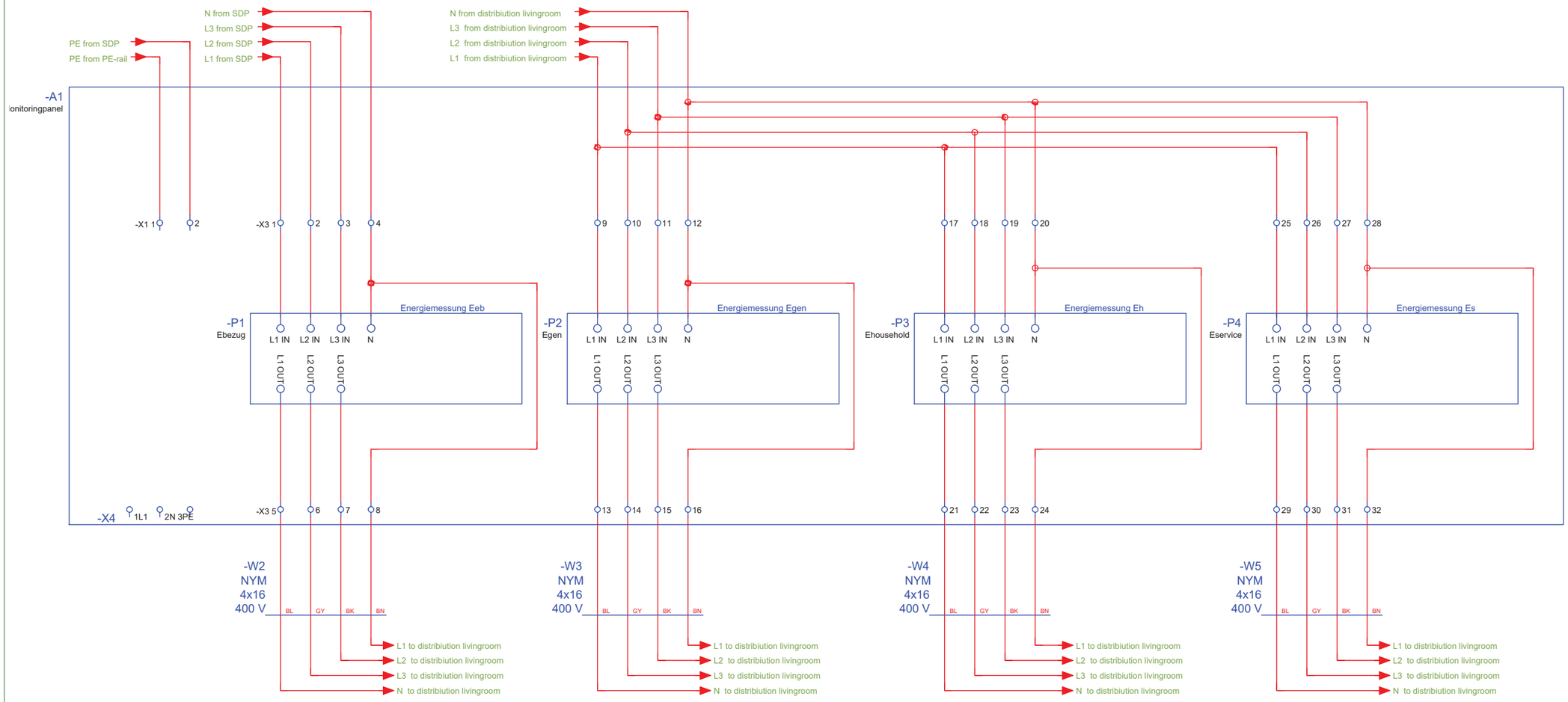

levelup

solar decathlon europe 21-22
WUPPERTAL GERMANY

Scale
n.t.s. (A3 420x297)

Phase
D#6

Drawing Content-HDU
Electricity meters' connection

ID-4001

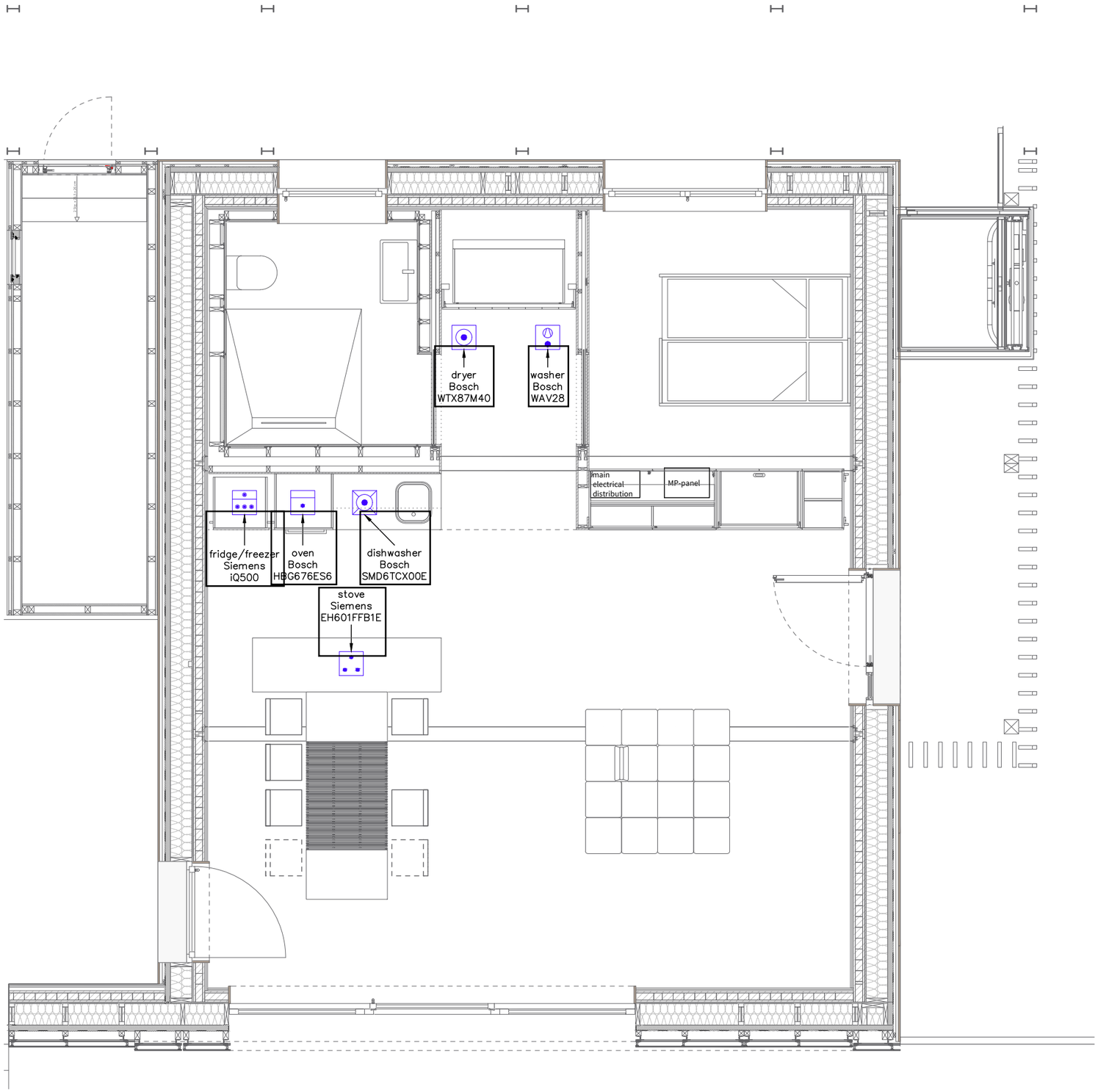

levelup

solar decathlon europe 21»22
WUPPERTAL GERMANY

Legend
- fridge & freezer
- dishwasher
- oven
- stove
- washer
- dryer

Scale
1:50 (A3 420x297)

Phase
D#6

Drawing Content-HDU
House appliances
Level 01

ID-5001

Fire Protection (FP)

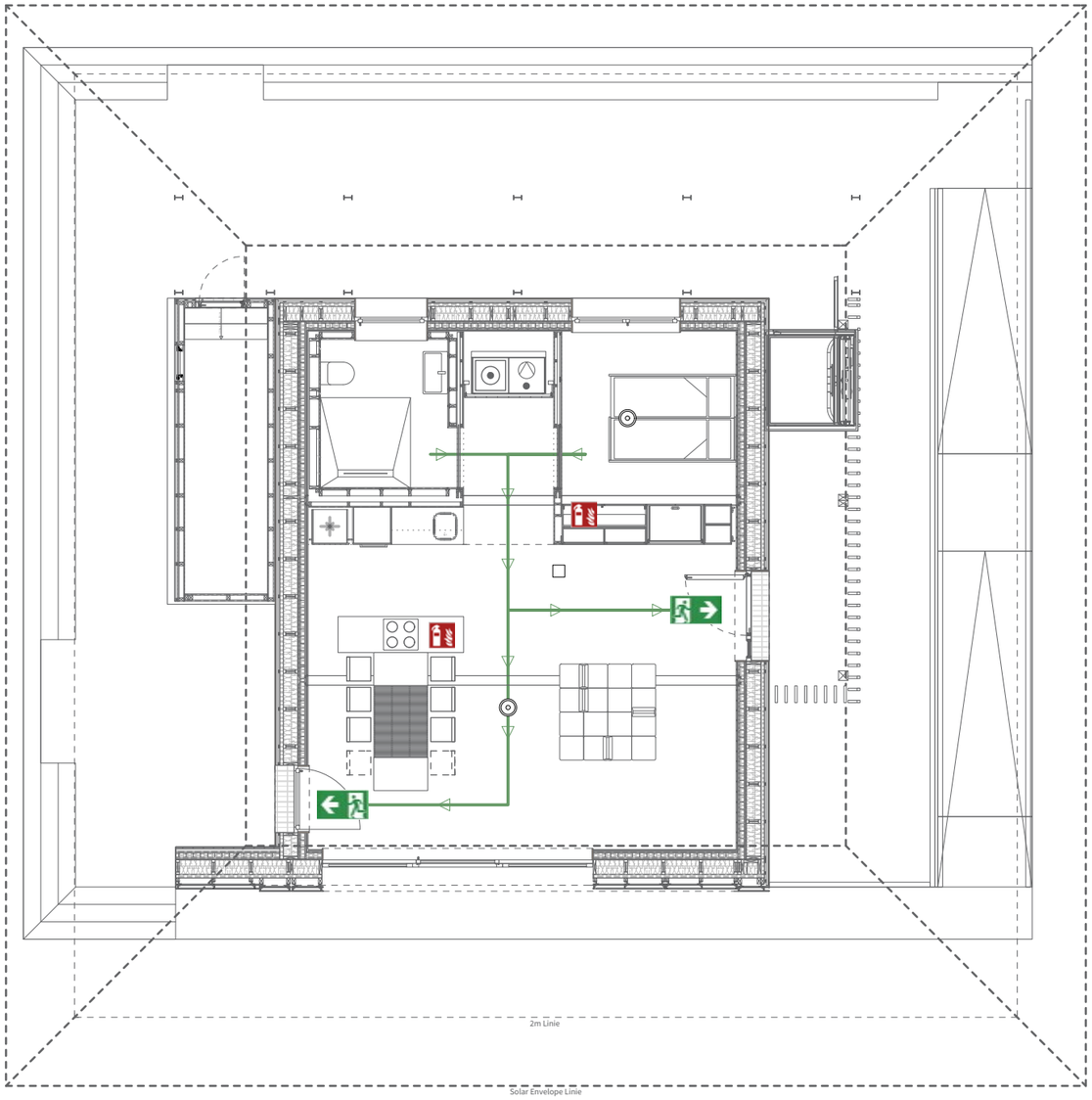

levelup

solar decathlon europe 21
WUPPERTAL GERMANY ...goes urban!

Escape direction
Fire extinguisher
smoke detector

Scale
1:100 (A3 420 x 297)

Phase
D#6

Drawing Content - HDU
Fire Protection Plan first floor

FP-0001

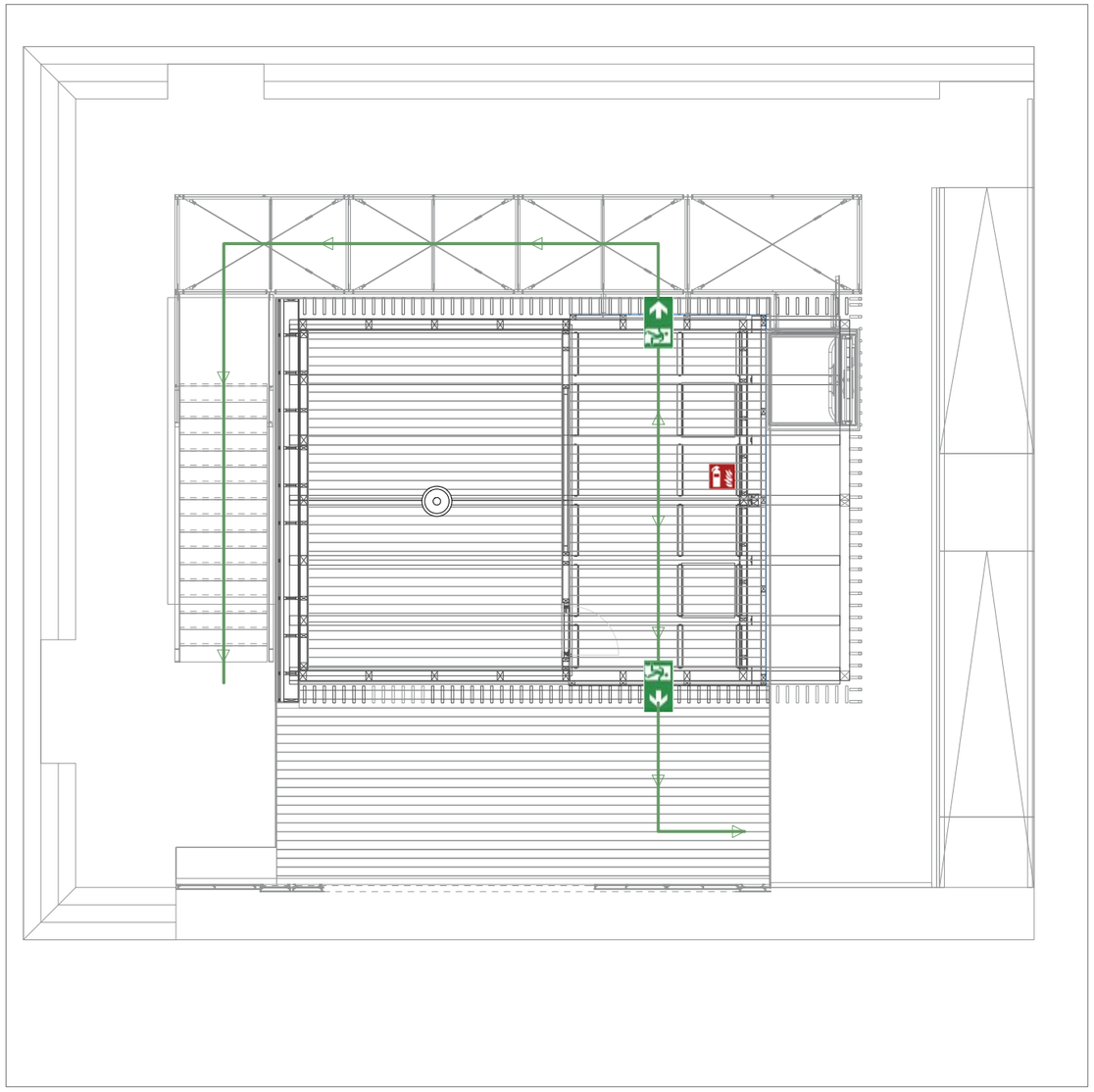

levelup

solar decathlon europe 21
WUPPERTAL GERMANY ...goes urban!

Escape direction
Fire extinguisher
smoke detector

Scale
1:100 (A3 420 x 297)

Phase
D#6

Drawing Content - HDU
Fire Protection Plan upper floor

FP-0002

Health and Safety (HS)

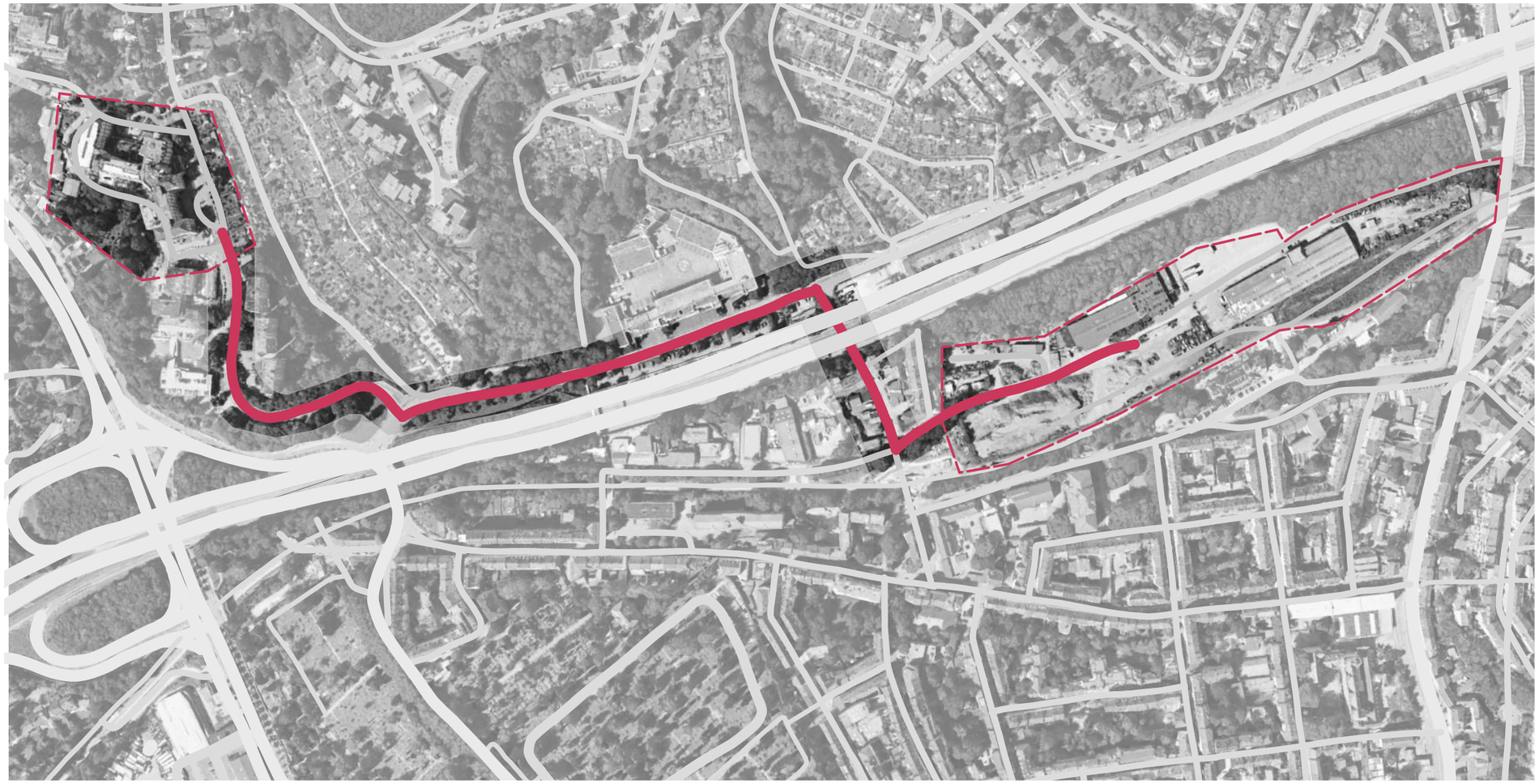

1.2 kilometer

4 minutes

Hospital

AGAPLESION
BETHESDA
Hainstraße 35

solar decathlon europe 21
WUPPERTAL GERMANY ...goes urban!

Solar Campus

Juliusstraße 12

levelup

solar decathlon europe 21
WUPPERTAL GERMANY ...goes urban!

General	GE
Architecture	AR
Interiors	IN
Structural	ST
Plumbing	PL
Solar Water Heating	SW
Mechanical	ME
Electrical	EL
Photovoltaic System	PV
Teleco. & Build. Aut. System	BAS
Instrumentation Drawings	ID
Site Operations	SO
Fire Protection	FP
Healthy & Safety	**HS**
Public Tour	PT

Route to Hospital
SDE Campus Area & Hospital Area

Scale
no scale (A3 420 x 297)

Phase
D#6

Drawing Content - HDU
Way from SDE Campus to Hospital

HS-0001

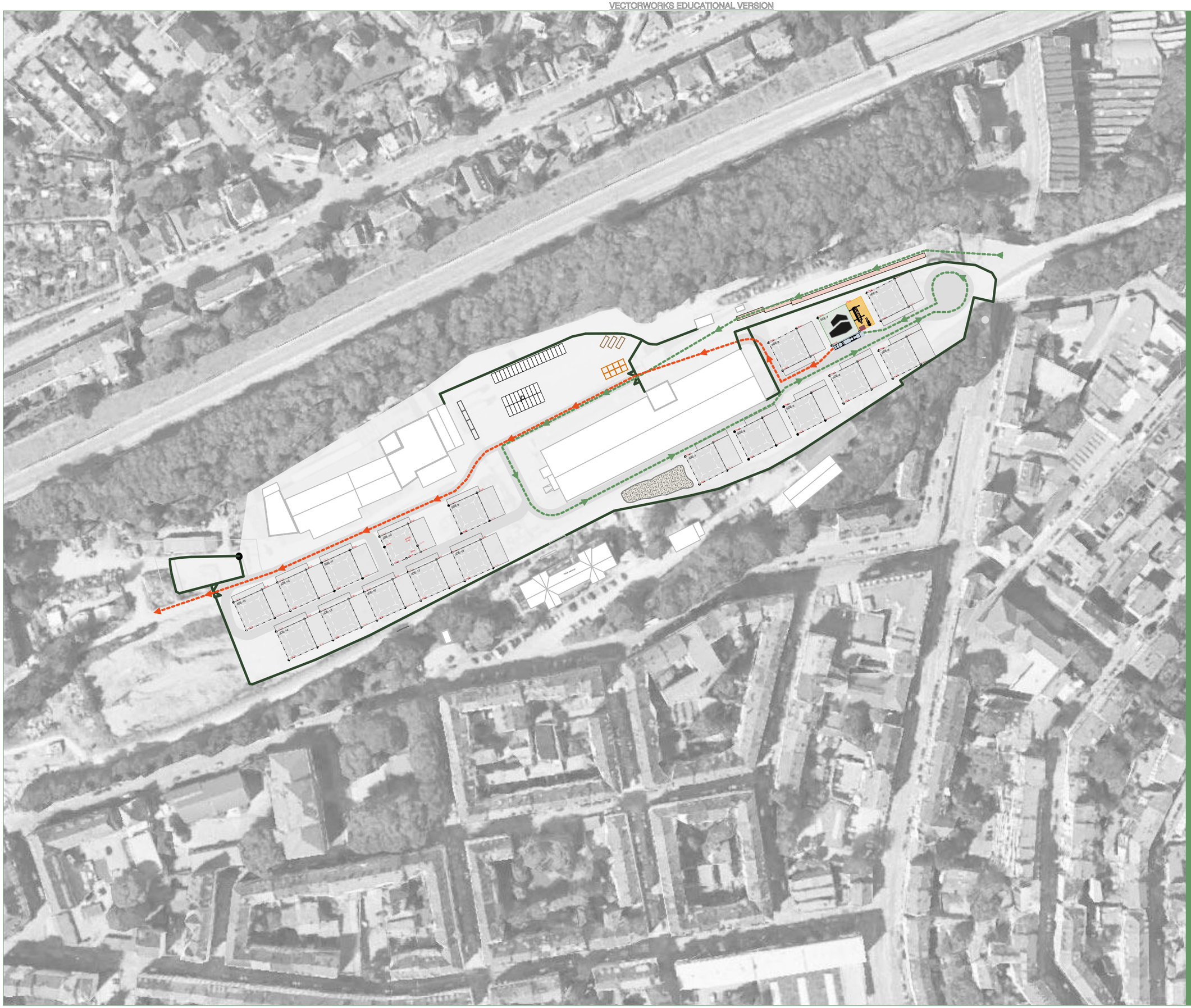

levelup

solar decathlon europe 21

WUPPERTAL GERMANY ...goes urban!

General	GE
Architecture	AR
Interiors	IN
Structural	ST
Plumbing	PL
Solar Water Heating	SW
Mechanical	ME
Electrical	EL
Photovoltaic System	PV
Teleco. & Build. Aut. System	BAS
Instrumentation Drawings	ID
Site Operations	SO
Fire Protection	FP
Healthy & Safety	**HS**
Public Tour	PT

Fence
Logistic Area
prototyp
temorary waiting area for Truks
Truckroute delivery
Truckroute out

Scale
1:2000 (A3 420 x 297)

Phase
D#6

Healthy & Safety
Site Plan Solar Campus with Truckroute

HS-0002

GENERALLY NECESSARY INFORMATION AND WARNING SIGNS

 Meeting Point	 Fire extinguisher	 wear gloves	 Electricity
 Escape direction	 No smoking	 wear helmet	 Forklift truck
 Escape direction	 No unauthorised persons allowed beyond this point	 wear safety shoes	 Truck
 First Aid	 Step drive	 weat Safety waistcoat	 Suspended load
 defibrillator	 Rubbish bin	 Lift correctly	 Mind the gap

CRANE OPERATING SIGNAL GUIDE

 Attention !	 Lift up !	 Depart !	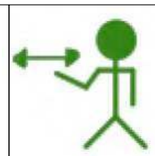 Drive right !
 Stop !	 Down !	 Come closer !	 Drive left !
 Stop - Danger !	 Slowly !	 Remove !	 Display of reduction distance !

levelup

solar decathlon europe 21
WUPPERTAL GERMANY ...goes urban!

General	GE
Architecture	AR
Interiors	IN
Structural	ST
Plumbing	PL
Solar Water Heating	SW
Mechanical	ME
Electrical	EL
Photovoltaic System	PV
Teleco. & Build. Aut. System	BAS
Instrumentation Drawings	ID
Site Operations	SO
Fire Protection	FP
Healthy & Safety	**HS**
Public Tour	PT

Scale
no scale (A3 420 x 297)

Phase
D#6

Drawing Content - HDU
Sign Instruction

HS-1001

30 construction workers work divided in two shifts

Plan	Task Name	Risk	Prevention checklist
HS-1003	Site setup (Container, Fencing, etc.)	Bumping, squeezing	Unhurried working methods and dear communication, wear PPE
HS-1004 HS-1005	Laying the foundation (steel plates)	Squeezing, knocked by objects or tools	Wear PPE, clear communication, proper tools, check tools
HS-1005 HS-1006	Unloading the wooden module #1 from the truck with mobile crane	Bumping, squeezing	Safety briefing, be outside of crane radius, minimum workers on site, wear PPE, use tools properly, clear communication
HS-1006	Positioning the ground floor module (#1) on the foundation and fasten and connect it to the foundation	Bumping, squeezing, knocked by objects or tools, fall from ladder	Safety briefing, be outside of crane radius, minimum workers on site, wear PPE, use tools properly, clear communication
HS-1007	Unload the wooden module #3 from the truck with mobile crane	Bumping, squeezing	Safety briefing, be outside of crane radius, minimum workers on site, wear PPE, use tools properly, clear communication
HS-1007	Positioning the ground floor module (#2) on the foundation and fasten and connect it to the foundation and to wooden module #1	Bumping, squeezing, knocked by objects or tools, fall from ladder	Safety briefing, be outside of crane radius, minimum workers on site, wear PPE, use tools properly, clear communication
HS-1008	Unload the wooden module #3 from the truck with mobile crane	Bumping, squeezing	Safety briefing, be outside of crane radius, minimum workers on site, wear PPE, use tools properly, clear communication
HS-1008	Positioning the ground floor module (#3) on the foundation and fasten and connect it to the foundation and to wooden module #2	Bumping, squeezing, knocked by objects or tools	Safety briefing, be outside of crane radius, minimum workers on site, wear PPE, use tools properly, clear communication
HS-1009	Positioning and fastening of external staircase incl. technical room to foundation and wooden module #1	Bumping, squeezing, knocked	Safety briefing, be outside of crane radius, minimum workers on site, wear PPE, use tools properly, clear communication
HS-1009	Positioning the arcade and fastening to wooden module #1 and #2	Bumping, squeezing, knocked by objects or tools	be outside of crane radius, minimum workers on site, wear PPE, clear communication, climbing equipment
HS-1010 HS-1011	Positioning the first floor modules (#4-#5) on the ground floor modules #1, #2 and fasten and connect them together	Squeezing	Unhurried working methods and clear communication, wear PPE, climbing equipment, use tools properly
HS-1011	Building platform construction	Squeezing	Unhurried working methods and clear communication, wear PPE, climbing equipment, use tools properly
HS-1012 HS-1013	Electrical works	Danger of electrical accident	Only professionals, observe the 5 safety rules, wear PPE, safety briefing, proper tools, check equipment
HS-1012 HS-1013	Sanitary works	Squeezing, injury due to sharp objects	Only professionals, wear PPE, proper tools, check equipment

levelup

solar decathlon europe 21
WUPPERTAL GERMANY ...goes urban!

Scale
no scale (A3 420 x 297)

Phase
D#6

Drawing Content - HDU
Working phases

HS-1002

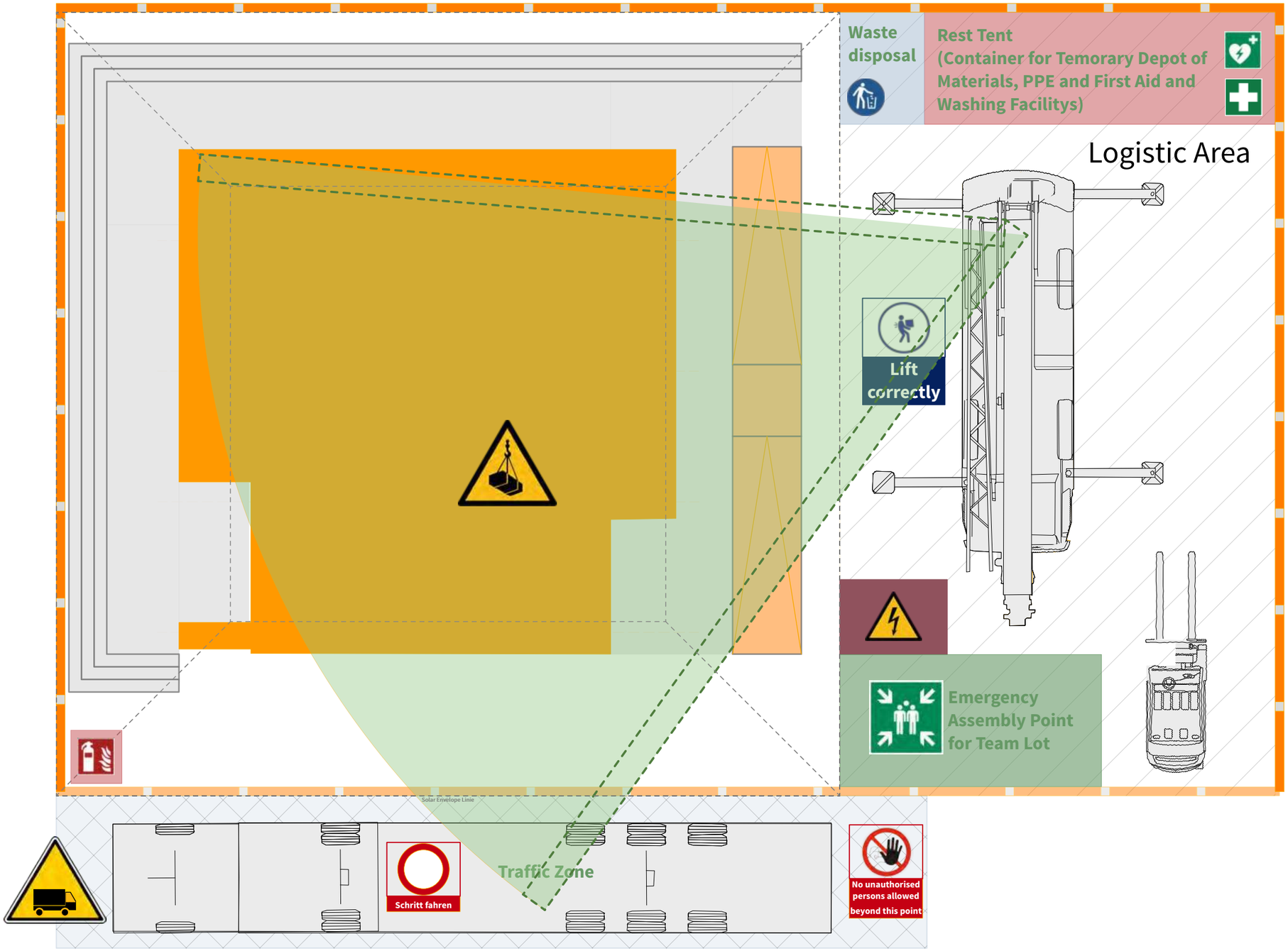

Sings at the entrance of Lot

levelup

solar decathlon europe 21
WUPPERTAL GERMANY ...goes urban!

General	GE
Architecture	AR
Interiors	IN
Structural	ST
Plumbing	PL
Solar Water Heating	SW
Mechanical	ME
Electrical	EL
Photovoltaic System	PV
Teleco. & Build. Aut. System	BAS
Instrumentation Drawings	ID
Site Operations	SO
Fire Protection	FP
Healthy & Safety	**HS**
Public Tour	PT

Foundation
Axis grid
Wood module
Stairs /technical room module
Greenhouse and roof
Terrace
Facade
Arcade
Platform
Temporary Fence
1. Escaperoute
2. Escaperoute

Scale
1:100 (A3 420 x 297)

Phase
D#6

Drawing Content - HDU
Crane radius

HS-1003

levelup

solar decathlon europe 21
WUPPERTAL GERMANY ...goes urban!

General	GE
Architecture	AR
Interiors	IN
Structural	ST
Plumbing	PL
Solar Water Heating	SW
Mechanical	ME
Electrical	EL
Photovoltaic System	PV
Teleco. & Build. Aut. System	BAS
Instrumentation Drawings	ID
Site Operations	SO
Fire Protection	FP
Healthy & Safety	**HS**
Public Tour	PT

Foundation
Axis grid
Wood module
Stairs /technical room module
Greenhouse and roof
Terrace
Facade
Arcade
Platform
Temporary Fence
1. Escaperoute
2. Escaperoute

Scale
1:100 (A3 420 x 297)

Phase
D#6

Drawing Content - HDU
Crane radius

HS-1004

levelup

solar decathlon europe 21
WUPPERTAL GERMANY ...goes urban!

General	GE
Architecture	AR
Interiors	IN
Structural	ST
Plumbing	PL
Solar Water Heating	SW
Mechanical	ME
Electrical	EL
Photovoltaic System	PV
Teleco. & Build. Aut. System	BAS
Instrumentation Drawings	ID
Site Operations	SO
Fire Protection	FP
Healthy & Safety	**HS**
Public Tour	PT

Foundation
Axis grid
Wood module
Stairs /technical room module
Greenhouse and roof
Terrace
Facade
Arcade
Platform
Temporary Fence
1. Escaperoute
2. Escaperoute

Scale
1:100 (A3 420 x 297)

Phase
D#6

Drawing Content - HDU
Foundation

HS-1005

levelup

solar decathlon europe 21
WUPPERTAL GERMANY ...goes urban!

General	GE
Architecture	AR
Interiors	IN
Structural	ST
Plumbing	PL
Solar Water Heating	SW
Mechanical	ME
Electrical	EL
Photovoltaic System	PV
Teleco. & Build. Aut. System	BAS
Instrumentation Drawings	ID
Site Operations	SO
Fire Protection	FP
Healthy & Safety	**HS**
Public Tour	PT

Foundation
Axis grid
Wood module
Stairs /technical room module
Greenhouse and roof
Terrace
Facade
Arcade
Platform
Temporary Fence
1. Escaperoute
2. Escaperoute

Scale
1:100 (A3 420 x 297)

Phase
D#6

Drawing Content - HDU
Moduel #1

HS-1006

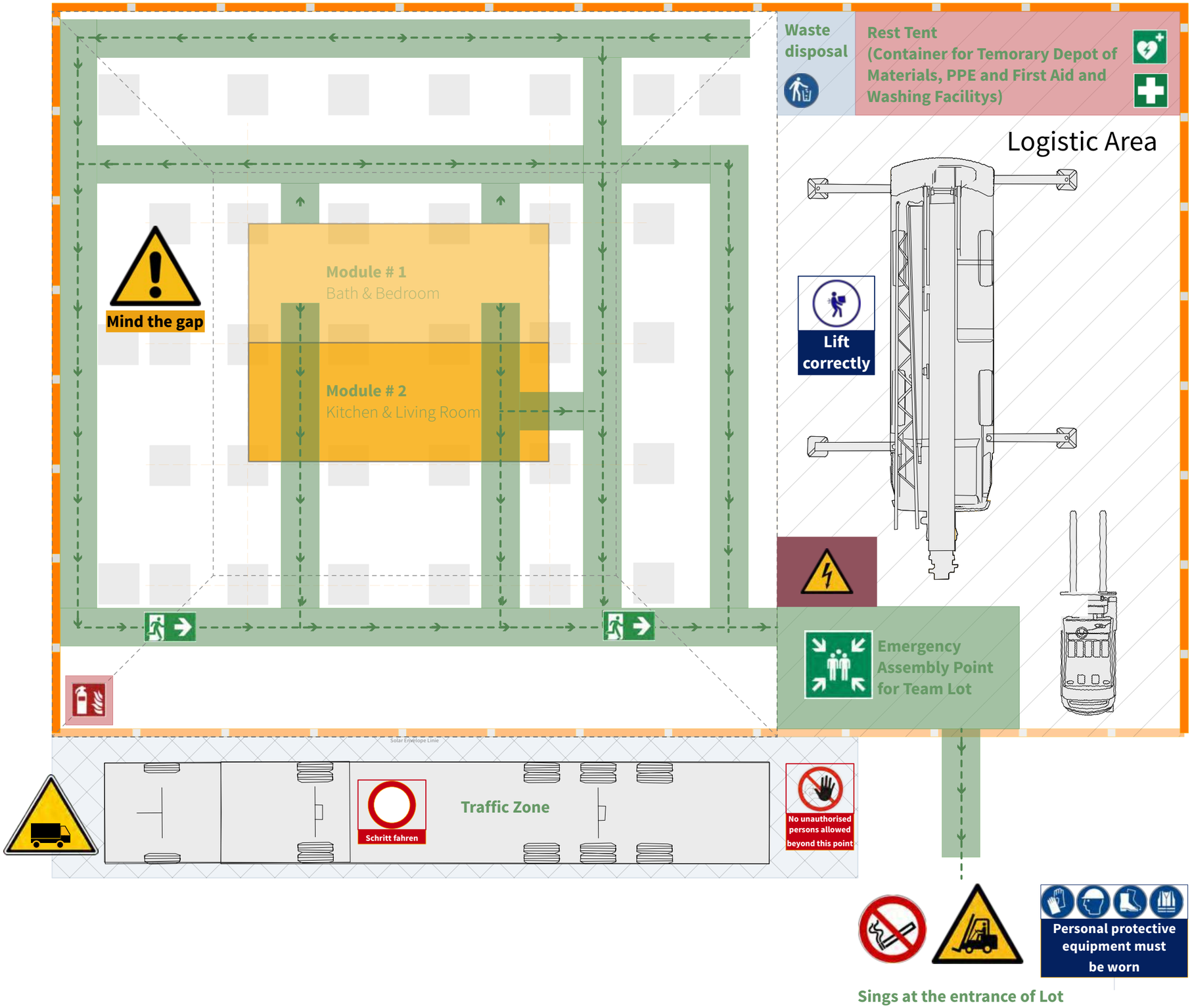

levelup

solar decathlon europe 21
WUPPERTAL GERMANY ...goes urban!

General	GE
Architecture	AR
Interiors	IN
Structural	ST
Plumbing	PL
Solar Water Heating	SW
Mechanical	ME
Electrical	EL
Photovoltaic System	PV
Teleco. & Build. Aut. System	BAS
Instrumentation Drawings	ID
Site Operations	SO
Fire Protection	FP
Healthy & Safety	**HS**
Public Tour	PT

Foundation
Axis grid
Wood module
Stairs /technical room module
Greenhouse and roof
Terrace
Facade
Arcade
Platform
Temporary Fence
1. Escaperoute
2. Escaperoute

Scale
1:100 (A3 420 x 297)

Phase
D#6

Drawing Content - HDU
Modele #2

HS-1007

levelup

solar decathlon europe 21
WUPPERTAL GERMANY ...goes urban!

General	GE
Architecture	AR
Interiors	IN
Structural	ST
Plumbing	PL
Solar Water Heating	SW
Mechanical	ME
Electrical	EL
Photovoltaic System	PV
Teleco. & Build. Aut. System	BAS
Instrumentation Drawings	ID
Site Operations	SO
Fire Protection	FP
Healthy & Safety	**HS**
Public Tour	PT

Foundation
Axis grid
Wood module
Stairs /technical room module
Greenhouse and roof
Terrace
Facade
Arcade
Platform
Temporary Fence
1. Escaperoute
2. Escaperoute

Scale
1:100 (A3 420 x 297)

Phase
D#6

Drawing Content - HDU
Module #3

HS-1008

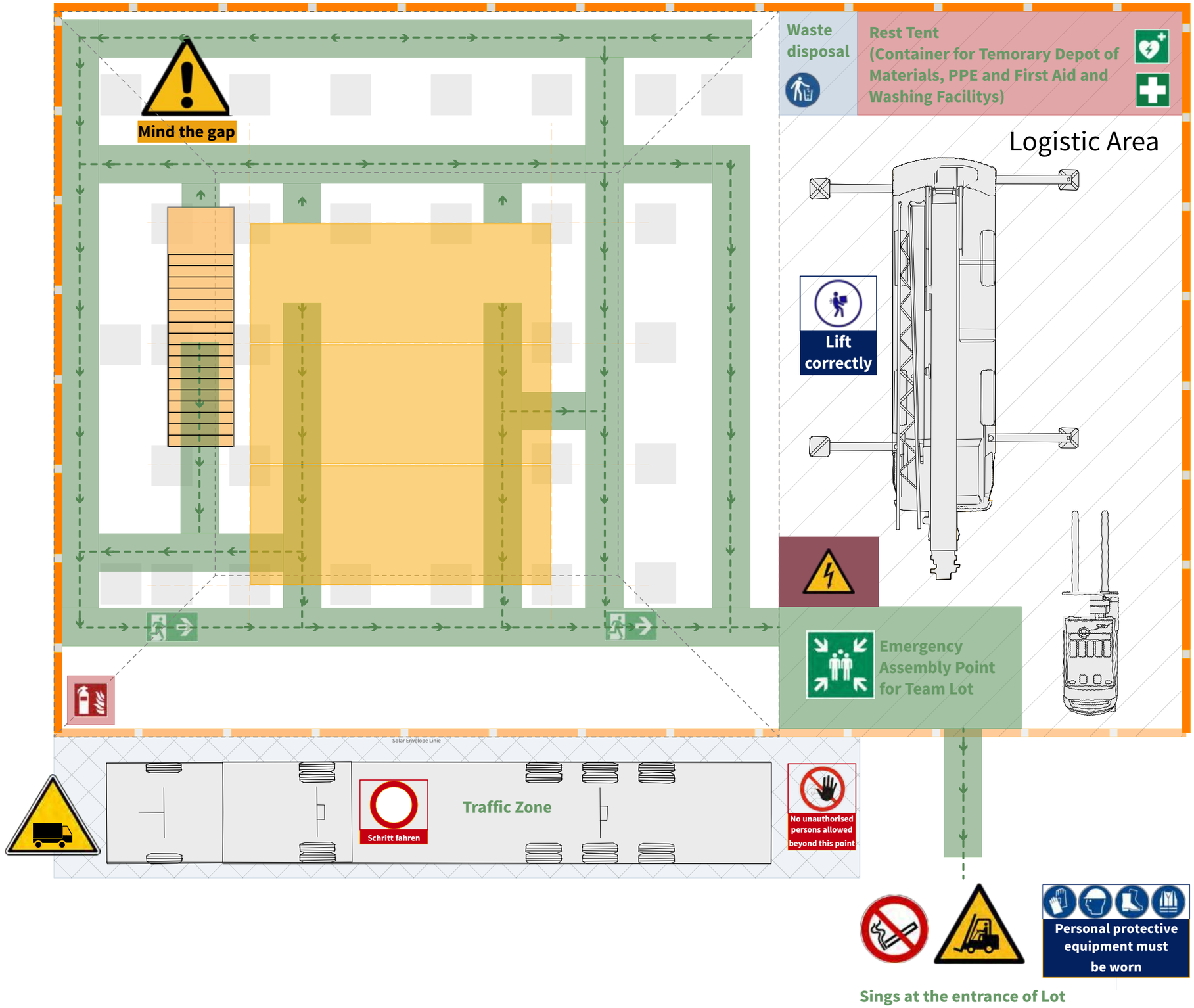

levelup

solar decathlon europe 21
WUPPERTAL GERMANY ...goes urban!

General	GE
Architecture	AR
Interiors	IN
Structural	ST
Plumbing	PL
Solar Water Heating	SW
Mechanical	ME
Electrical	EL
Photovoltaic System	PV
Teleco. & Build. Aut. System	BAS
Instrumentation Drawings	ID
Site Operations	SO
Fire Protection	FP
Healthy & Safety	**HS**
Public Tour	PT

Foundation
Axis grid
Wood module
Stairs /technical room module
Greenhouse and roof
Terrace
Facade
Arcade
Platform
Temporary Fence
1. Escaperoute
2. Escaperoute

Scale
1:100 (A3 420 x 297)

Phase
D#6

Drawing Content - HDU
Stairs & technical room module

HS-1009

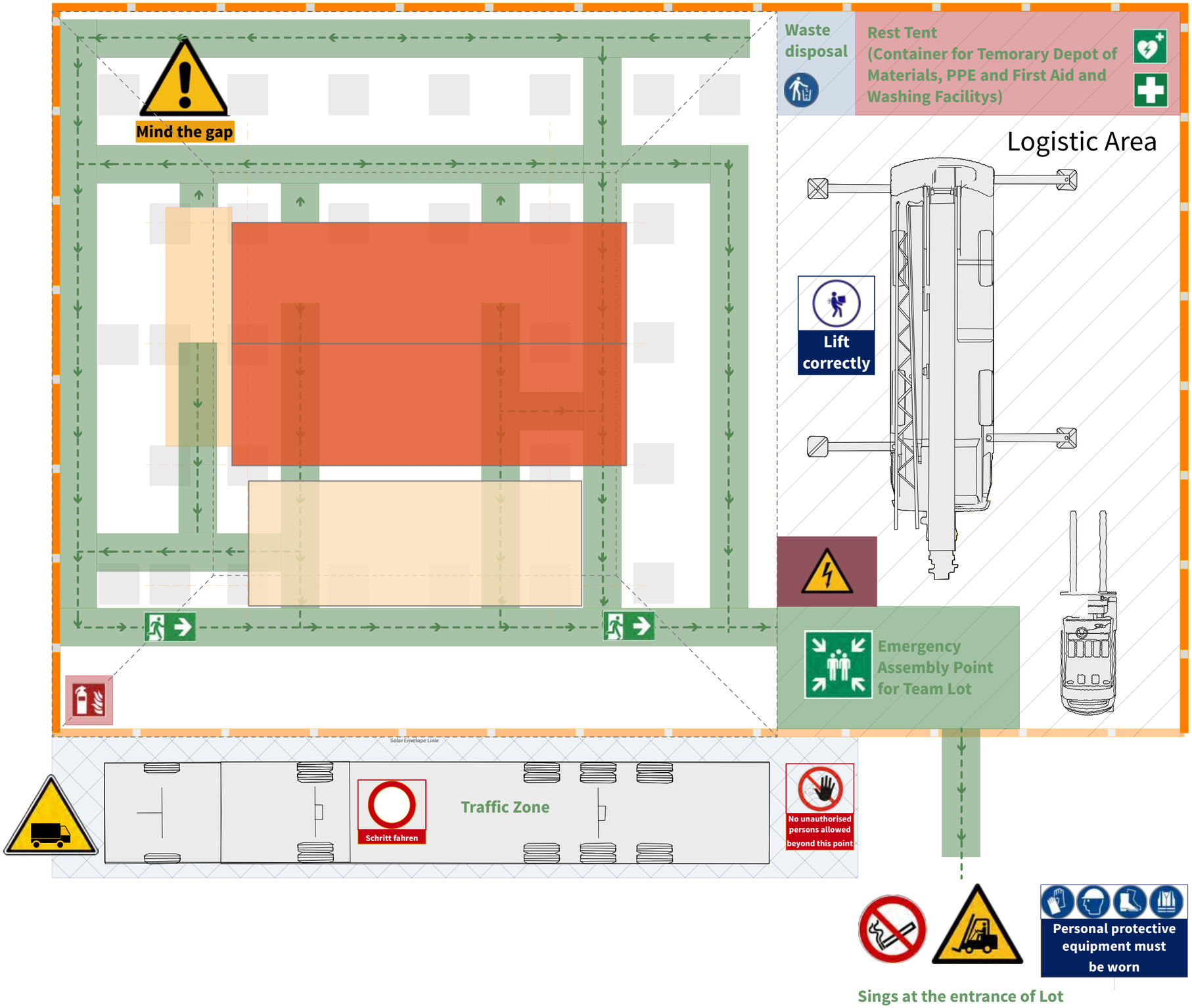

levelup

solar decathlon europe 21
WUPPERTAL GERMANY ...goes urban!

General	GE
Architecture	AR
Interiors	IN
Structural	ST
Plumbing	PL
Solar Water Heating	SW
Mechanical	ME
Electrical	EL
Photovoltaic System	PV
Teleco. & Build. Aut. System	BAS
Instrumentation Drawings	ID
Site Operations	SO
Fire Protection	FP
Healthy & Safety	**HS**
Public Tour	PT

Foundation
Axis grid
Wood module
Stairs /technical room module
Greenhouse and roof
Terrace
Facade
Arcade
Platform
Temporary Fence
1. Escaperoute
2. Escaperoute

Scale
1:100 (A3 420 x 297)

Phase
D#6

Drawing Content - HDU
Greenhouse & Roof

HS-1010

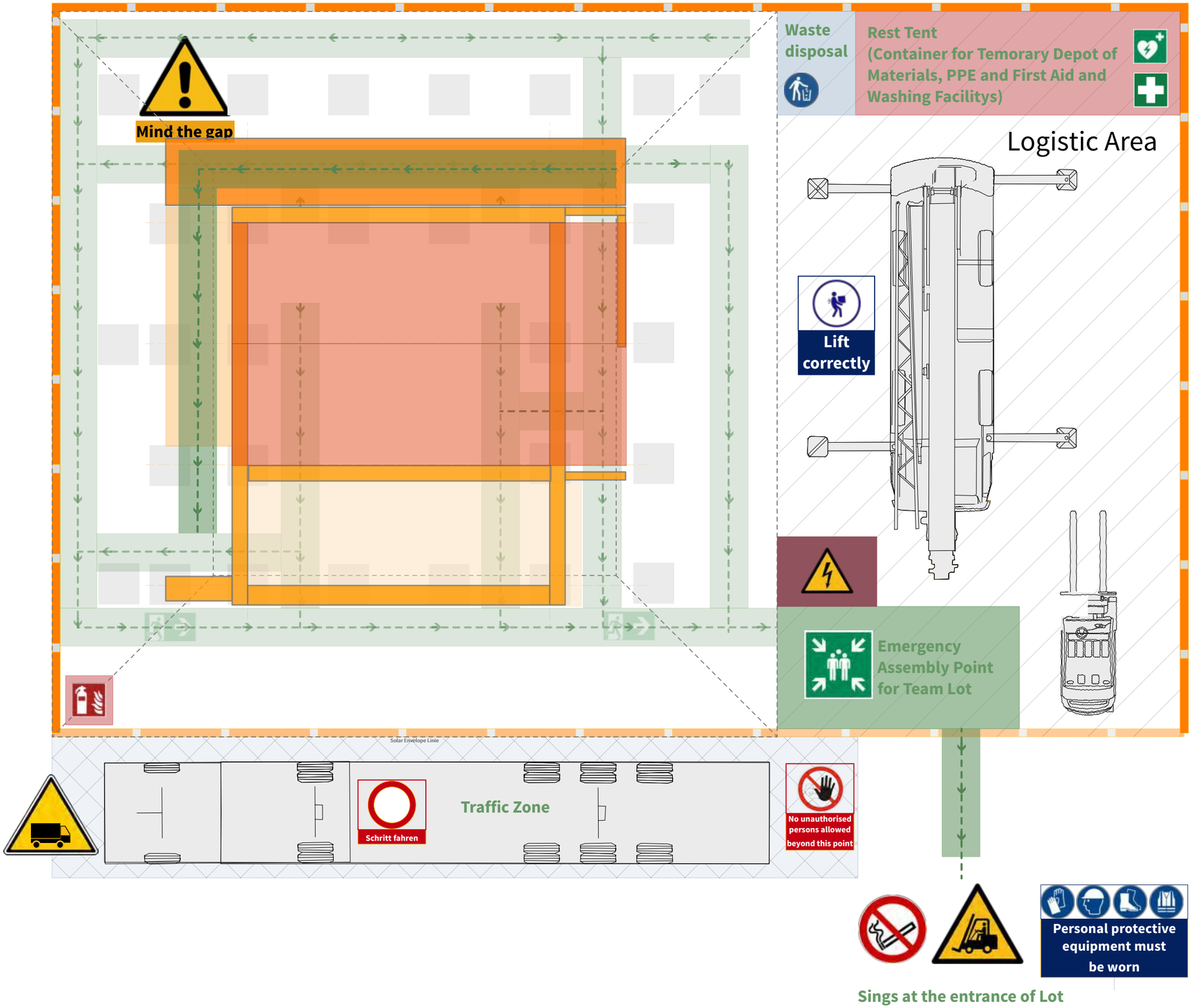

levelup

solar decathlon europe 21
WUPPERTAL GERMANY ...goes urban!

General	GE
Architecture	AR
Interiors	IN
Structural	ST
Plumbing	PL
Solar Water Heating	SW
Mechanical	ME
Electrical	EL
Photovoltaic System	PV
Teleco. & Build. Aut. System	BAS
Instrumentation Drawings	ID
Site Operations	SO
Fire Protection	FP
Healthy & Safety	**HS**
Public Tour	PT

Foundation
Axis grid
Wood module
Stairs /technical room module
Greenhouse and roof
Terrace
Facade
Arcade
Platform
Temporary Fence
1. Escaperoute
2. Escaperoute

Scale
1:100 (A3 420 x 297)

Phase
D#6

Drawing Content - HDU
Arcade & Facade

HS-1011

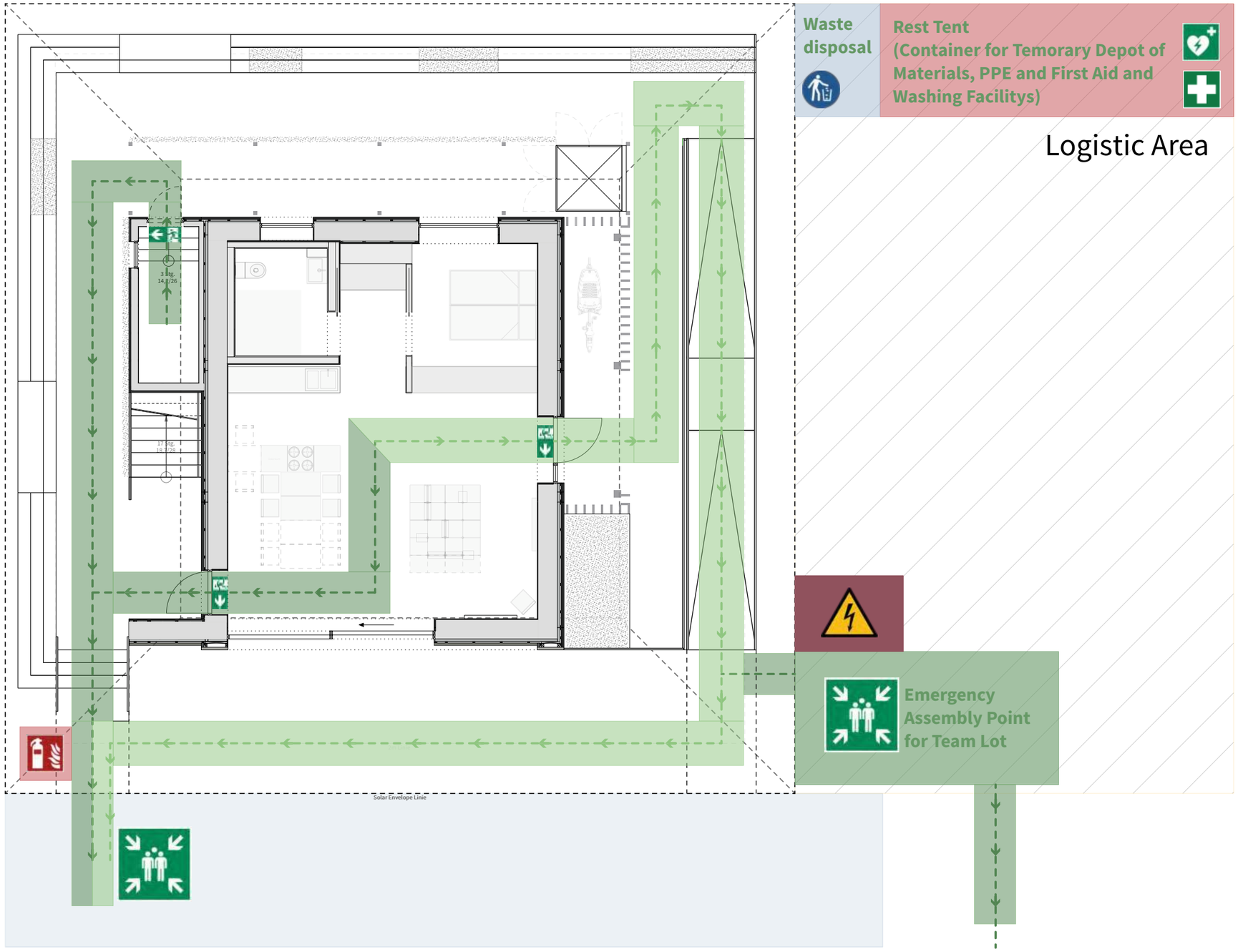

levelup

solar decathlon europe 21
WUPPERTAL GERMANY ...goes urban!

General	GE
Architecture	AR
Interiors	IN
Structural	ST
Plumbing	PL
Solar Water Heating	SW
Mechanical	ME
Electrical	EL
Photovoltaic System	PV
Teleco. & Build. Aut. System	BAS
Instrumentation Drawings	ID
Site Operations	SO
Fire Protection	FP
Healthy & Safety	**HS**
Public Tour	PT

Foundation
Axis grid
Wood module
Stairs /technical room module
Greenhouse and roof
Terrace
Facade
Arcade
Platform
Temporary Fence
1. Escaperoute
2. Escaperoute

Scale
1:100 (A3 420 x 297)

Phase
D#6

Drawing Content - HDU
Escaperoute groundfloor

HS-2001

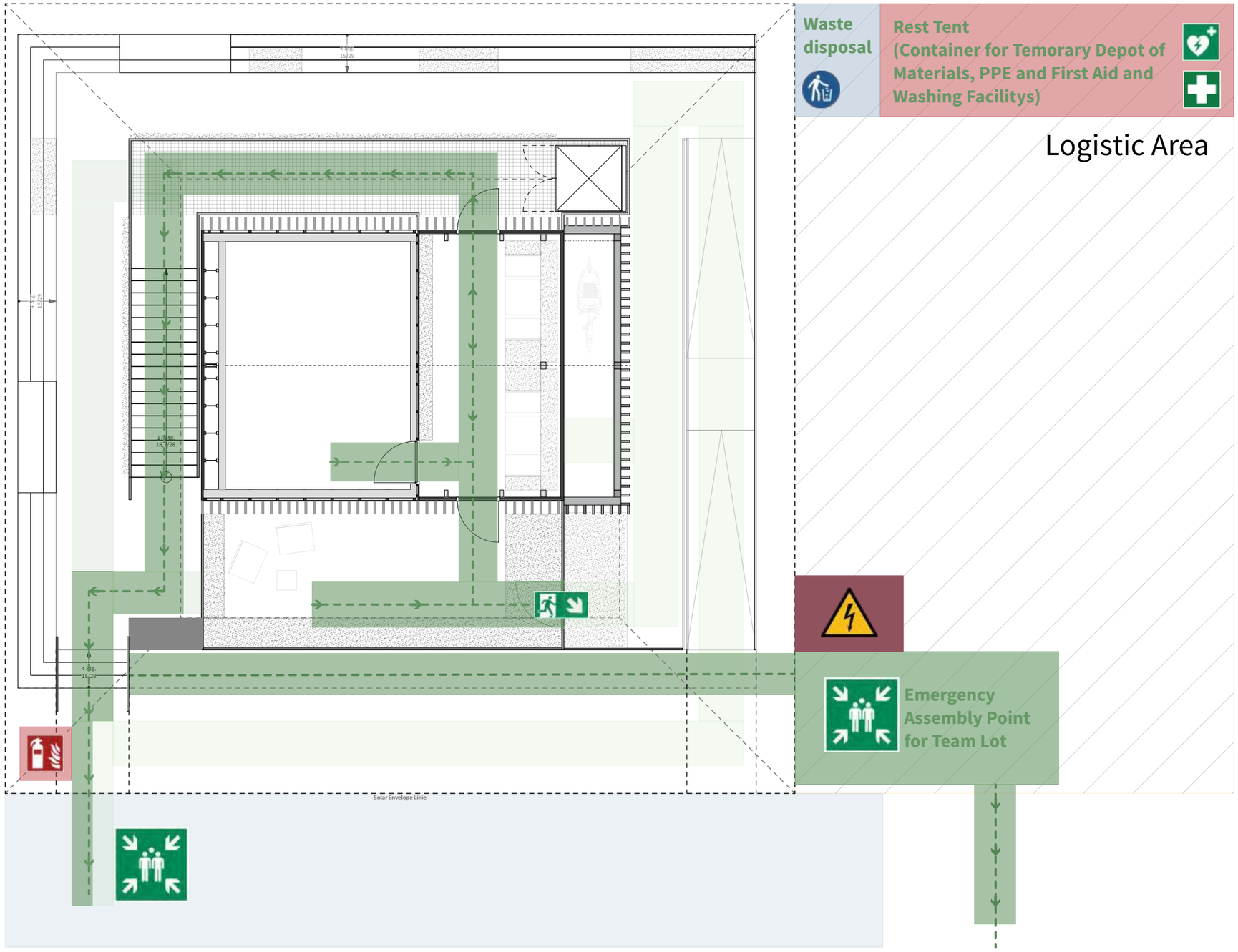

levelup

solar decathlon europe 21
WUPPERTAL GERMANY ...goes urban!

General	GE
Architecture	AR
Interiors	IN
Structural	ST
Plumbing	PL
Solar Water Heating	SW
Mechanical	ME
Electrical	EL
Photovoltaic System	PV
Teleco. & Build. Aut. System	BAS
Instrumentation Drawings	ID
Site Operations	SO
Fire Protection	FP
Healthy & Safety	**HS**
Public Tour	PT

Foundation
Axis grid
Wood module
Stairs /technical room module
Greenhouse and roof
Terrace
Facade
Arcade
Platform
Temporary Fence
1. Escaperoute
2. Escaperoute

Scale
1:100 (A3 420 x 297)

Phase
D#6

Drawing Content - HDU
Escaperoute secondfloor

HS-2002

Public Tour (PT)

OUTSIDE and START
1. Check-In
2. Insights of levelup
3. Modular construction
4. Sustainability / innovation
5. Cargo bike

INSIDE
6. Modularisation of the rooms
7. Bathroom
8. interior design of kitchen, living, work (incl. lighting)
9. Facade

TOP and END
10. greening / common areas
11. Sustainability and solar energy
12. Bar, lounge and viewing point
13. Urban mobility and social community with sharing app
14. Energy/technology room
15. infiltration ditch (as a sub-theme of the technical room)
16. Check-Out

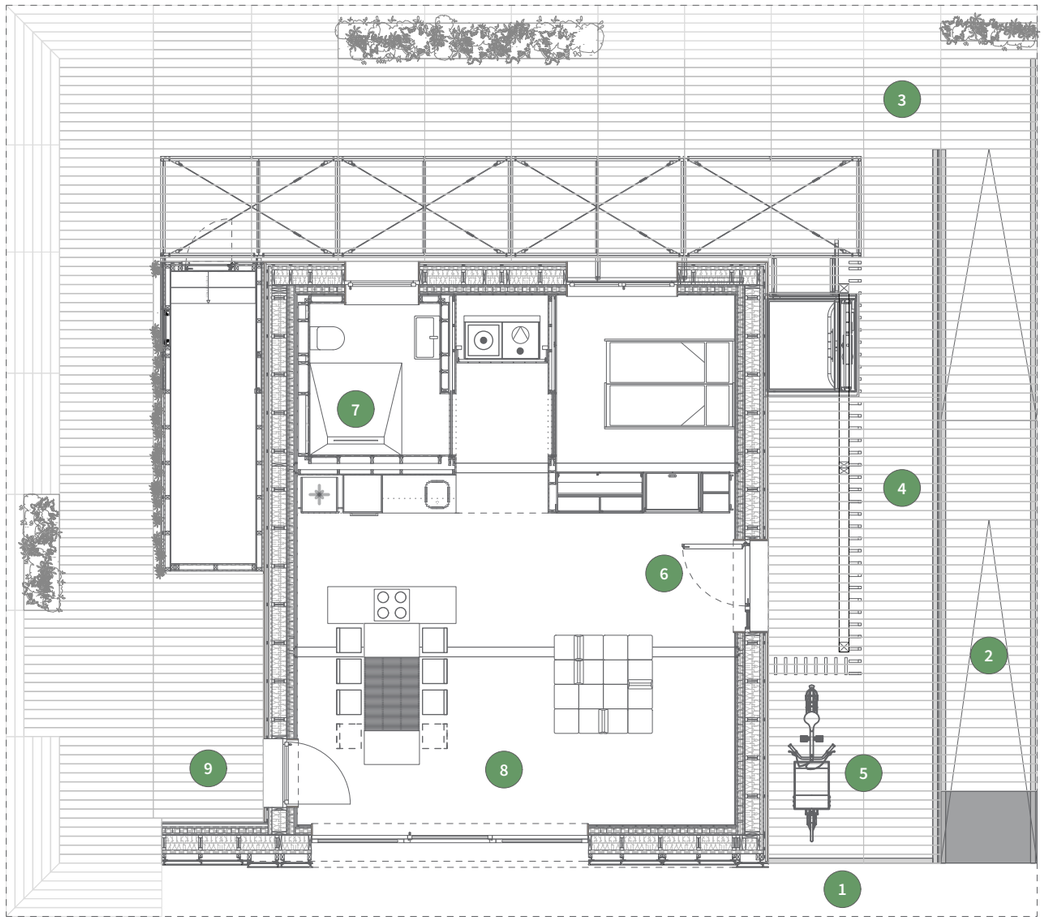

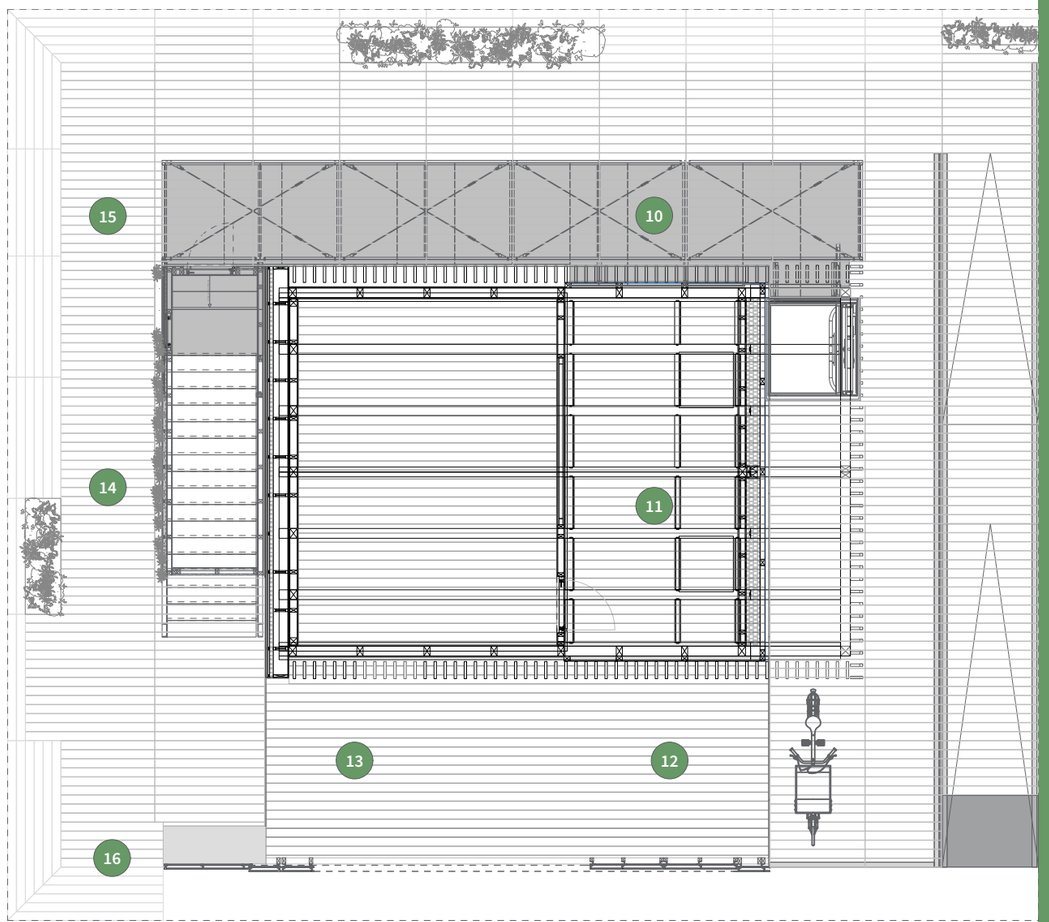

levelup

solar decathlon europe 21
WUPPERTAL GERMANY ...goes urban!

General	GE
Architecture	AR
Interiors	IN
Structural	ST
Plumbing	PL
Solar Water Heating	SW
Mechanical	ME
Electrical	EL
Photovoltaic System	PV
Teleco. & Build. Aut. System	BAS
Instrumentation Drawings	ID
Site Operations	SO
Fire Protection	FP
Healthy & Safety	HS
Public Tour	**PT**

0 1,3 2,5 3,8 5

Scale
1:100

Phase
D#6

Drawing Content - HDU
Site accessibility

PT-0001

OUTSIDE and START
1. Check-In
2. Insights of levelup
3. Modular construction
4. Sustainability / innovation
5. Cargo bike

INSIDE
6. Modularisation of the rooms
7. Bathroom
8. interior design of kitchen, living, work (incl. lighting)
9. Facade

TOP and END
10. greening / common areas
11. Sustainability and solar energy
12. Bar, lounge and viewing point
13. Urban mobility and social community with sharing app
14. Energy/technology room
15. infiltration ditch (as a sub-theme of the technical room)
16. Check-Out

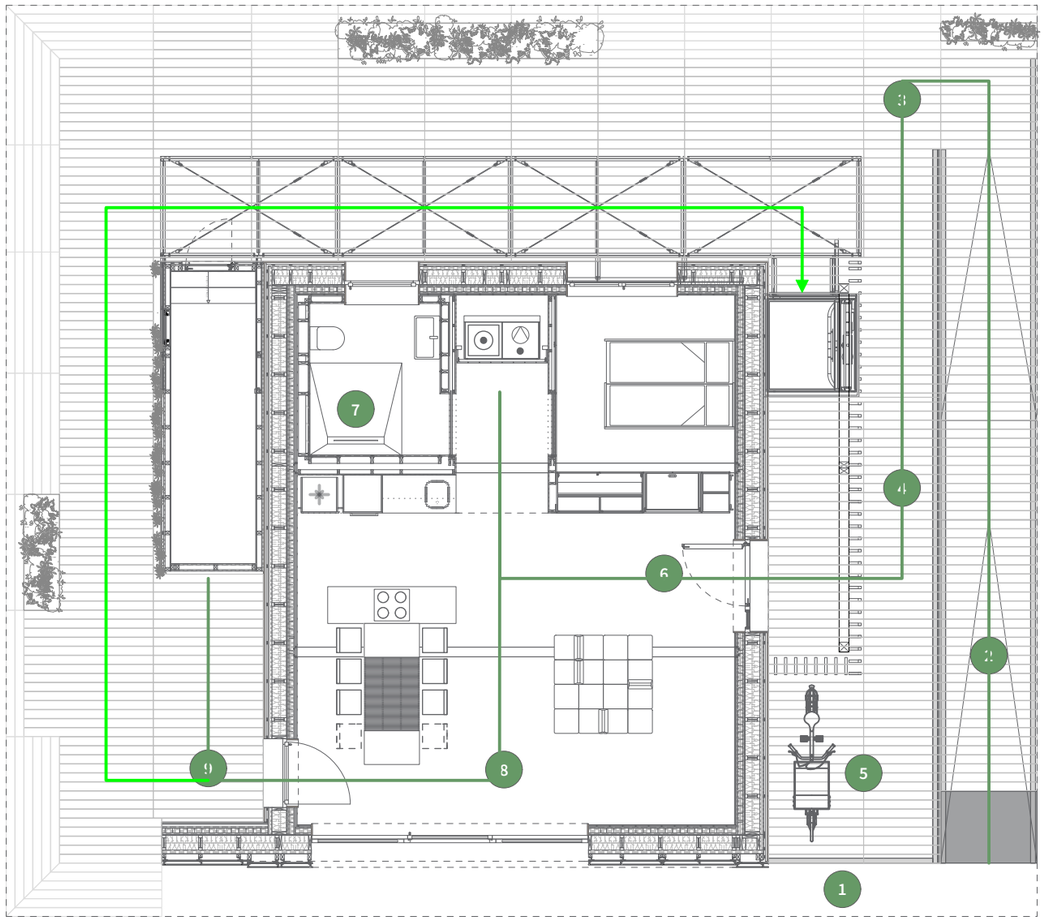

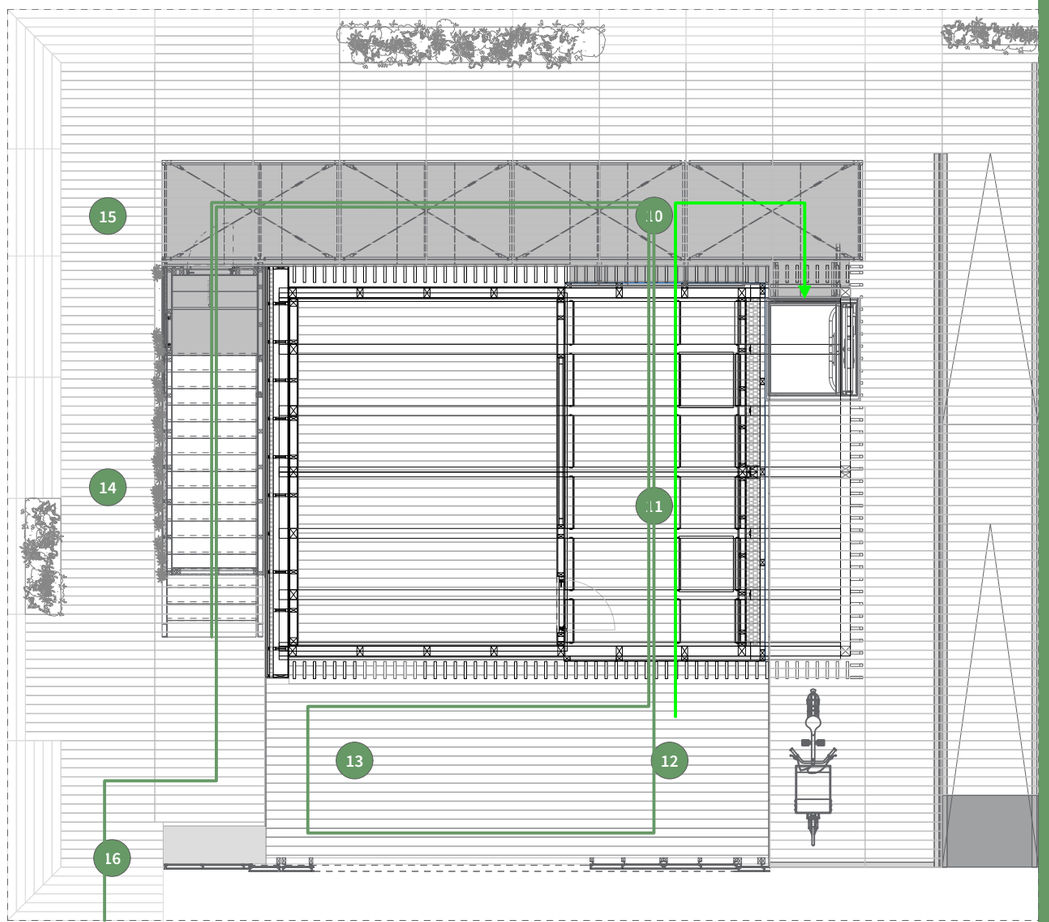

levelup

solar decathlon europe 21
WUPPERTAL GERMANY ...goes urban!

General	GE
Architecture	AR
Interiors	IN
Structural	ST
Plumbing	PL
Solar Water Heating	SW
Mechanical	ME
Electrical	EL
Photovoltaic System	PV
Teleco. & Build. Aut. System	BAS
Instrumentation Drawings	ID
Site Operations	SO
Fire Protection	FP
Healthy & Safety	HS
Public Tour	**PT**

0 1,3 2,5 3,8 5

Lift and barrier-free access

Scale
1:100

Phase
D#6

Drawing Content - HDU
House Tour Floor Plan

PT-1001